Village of Lincolnshire
One Olde Half Day Road
Lincolnshire, IL 60069
www.lincolnshireil.gov

AGENDA
ARCHITECTURAL REVIEW BOARD MEETING
Public Meeting Room, Village Hall
Tuesday, August 20, 2019
7:00 p.m.

Reasonable accommodations or auxiliary aids will be provided to enable persons with disabilities to effectively participate in any public meetings. Please contact the Village Administrative Office (847.883.8600) 48 hours in advance if you need any special services or accommodations. The Architectural Review Board will not proceed past 10:30 p.m. unless a motion is made and approved by a majority of the Architectural Review Board members to extend the meeting one-half hour to 11:00 p.m. Any agenda items or other business that are not addressed within this time frame will be continued to the next regularly scheduled Architectural Review Board Meeting.

CALL TO ORDER

1.0 ROLL CALL

2.0 APPROVAL OF MINUTES

2.1 Approval of the Minutes of the Architectural Review Board Meeting Held on Tuesday, July 16, 2019

3.0 ITEMS OF GENERAL BUSINESS

3.1 Continued Consideration and Discussion of Site Design, Building Elevations, Landscape Plans, Exterior Lighting, Parking, and Exterior Signage for a Proposed New Medical Office Building – 231 Olde Half Day Road (Alexander and Julia Katsnelson)

3.2 Consideration and Discussion of a Minor Special Use Amendment to Permit a Hall of Fame at 1 Stevenson Drive and a Pergola at 16139 Port Clinton Road (Adlai E. Stevenson High School District 125)

4.0 UNFINISHED BUSINESS
5.0 NEW BUSINESS
6.0 CITIZEN COMMENTS
7.0 ADJOURNMENT

Village of Lincolnshire
One Olde Half Day Road
Lincolnshire, IL 60069
www.lincolnshireil.gov

UNAPPROVED Minutes of the regularly scheduled **ARCHITECTURAL REVIEW BOARD** held on Tuesday, July 16, 2019. in the Public Meeting Room of the Village Hall, One Olde Half Day Road, Lincolnshire, IL.

PRESENT: Chair Kennerley and Members Orzeske, Baskin, Tapia, McCall and Santosuosso

ABSENT: Trustee-Liaison Hancock and Member Killedar

ALSO PRESENT: Ben Gilbertson, Assistant Village Manager/Director of Community and Economic Development (AVM/CED)

CALL TO ORDER

1.0 ROLL CALL

The roll was called by **AVM/CED Gilbertson**. **Chair Kennerley** declared a quorum to be present at 7:00 p.m.

2.0 APPROVAL OF MINUTES

2.1 Approval of the minutes of the Architectural Review Board Meeting held on Tuesday, June 18, 2019.

Member Santosuosso moved, seconded by **Member Orzeske**, to approve the minutes as presented for the Tuesday, June 18, 2019 Architectural Review Board meeting. Motion passed unanimously by voice vote.

3.0 ITEMS OF GENERAL BUSINESS

3.1 Continued Public Hearing regarding Wall Sign Variations to Increase the Sign Face Height from the Maximum Permitted 3' to 4'-3¼" (East Elevation); Increase the Sign Face Height from the Maximum Permitted 3' to 5'-10¼" and Increase the Sign Letter Height from the Maximum Permitted 2' to 2'-6¾" (North Elevation); and Provide Internal Illumination through the Face of Individual Letter Sets (Both Elevations) – 350 Knightsbridge Parkway (Knight Bridge Pky, LLC).

3.2 Consideration and Discussion of Site Design, Building Elevations, Landscape Plans, Exterior Lighting, Parking, and Exterior Signage for a Proposed Hotel Building – 350 Knightsbridge Parkway (Knight Bridge Pky, LLC)

Chair Kennerley stated both agenda items relate to the proposed hotel at 350 Knightsbridge Parkway, and proposed the ARB discuss both items during the public hearing portion of the agenda.

Chair Kennerley opened the public hearing and reviewed the procedures and process for the public hearing.

AVM/CED Gilbertson summarized the revisions provided by the Home2 Suites by Hilton design team based upon feedback from the last ARB meeting. These included revised elevations, building materials and colors, details on focal points in and out of the site, material and color samples of the signs, and code-compliant comparisons for the sign variation request.

AVM/CED Gilbertson noted the petitioner reduced sign length, sign face height, and letter height for the north elevation wall sign. He also noted the petitioner provided renderings of code-permitted and proposed sign dimensions, per the ARB's previous request. **AVM/CED Gilbertson** further noted the petitioner met with Van Vlissingen representatives who have provided a letter of support for the building and site design. The Zoning Board also reviewed the project for the related zoning relief requests and forwarded a favorable recommendation to the Village Board earlier in June.

AVM/CED Gilbertson noted the petitioner added more stone material at the northwest corner to provide the effect of a "wrap" around the building as well as additional stone material at the base of the building, main entrance, and along the east patio wall. The EIFS wrap was modified in the renderings to more accurately reflect the true material color; the beacon feature was widened at the top of the building over the main entrance; and the ground sign illumination was revised to match the wall sign illumination. **AVM/CED Gilbertson** noted there will be additional dead tree removals after further evaluation of the landscape plan by the petitioner's landscape consultant.

Shilpa Purohit of Purohit Architects and **Jeff Torens** of Gary R. Weber and Associates were sworn in by **Chair Kennerley. Ms. Purohit** requested the revised findings of fact for the wall sign variation be entered into the record, based on the changes to revised sign dimensions since the last ARB meeting.

Ms. Purohit reviewed changes to the materials and location of the trash enclosure, building design and materials, canopy materials, east elevation wall sign size reduction, and the materials/samples board.

Member Santosuosso commented on the east elevation wall sign and stated the 'Suites by Hilton' text did not seem very distinguishable. **Shilpa Purohit** stated the cut out letters will be illuminated and visible on the building.

Member Orzeske said he was satisfied with the changes. **Member McCall** agreed, noting the revisions made the building more interesting. **Member Baskin** stated this was an improvement, but suggested the top of the building include a thin strip in the fascia or widened top spandrel. **Member Baskin** also added the orientation of the patio would have been better located south of the entrance, but by making the sidewalk a contrasting color or texture may provide additional character to the entryway. **Chair Kennerley** stated she liked the original trash enclosure red color but was fine with the changes overall. **Members Santosuosso** and **Tapia** both stated they appreciated the revisions as presented.

DRAFT

Jeff Torrens, Gary R. Weber Associates, presented the revised landscape plan, which included expanded base plantings around the ground sign. These revisions included a mix of plantings with varying bloom times to present a mix of colors year round. Additional ground landscape material was added to screen utilities. **Chair Kennerley** inquired about winter conditions of the landscape bed. **Mr. Torrens** noted the hydrangea will be dormant in the winter; however the patio landscape will include boxwood. **Chair Kennerley** noted landscaping along the sidewalk would lack color in winter and asked if something else could be added. **Member Baskin** suggested junipers along the sidewalk to establish the approach to the entrance and other ground cover with more density and mass with the addition of a shade tree over the sidewalk. **Mr. Torrens** said they will look into adding additional evergreens to enhance the winter scape. There was discussion regarding Autumn Blaze Maples and environmental challenges with this species. **Mr. Torrens** said they will look into this concern. **Mr. Torrens** reviewed the perimeter landscape and parking island plans and planting choices. **Chair Kennerley** said she would like to see more layering in the front entrance to provide varying heights including grasses with more year-round greenery. **Member Baskin** suggested boxwood in larger scale, noting they are slow-growing plants. He also suggested pulling plantings closer together for more emphasis on pedestrian scale. **Member Baskin** inquired about landscaping irrigation and commented landscape installations are struggling without the irrigation. **Mr. Torrens** stated there are no plans to include an irrigation system, but would discuss further with ownership.

Chair Kennerley opened the floor for members of the audience. No speakers came forward and there was no public testimony. There being no further questions or discussion, **Chair Kennerley** closed the public hearing.

Member Baskin moved, seconded by **Member Santosuosso**, to recommend approval to the Village Board for the variations regarding wall sign face height, wall sign letter height, and illumination, per Section 12-9-1-B of the Lincolnshire Village Code. Motion passed unanimously by voice vote.

Member Baskin moved, seconded by **Member McCall**, to recommend approval to the Village Board for the proposed development plans, subject to the following recommendations;

1. Changes to the top design element/fascia of the building exterior.
2. Material changes to the entryway sidewalk to help establish the building entrance.
3. Consideration for evergreen materials at the front entrance, as well as additional plantings along the building foundations to provide scale and screening.
4. Relocation of the parking island opposite the patio area and move it southward towards the front entrance to give emphasis to the entry.

Motion passed unanimously by voice vote.

DRAFT

AVM/CD Gilbertson stated staff will work with the petitioner to incorporate the recommendations from the ARB. The petitioner will then move forward to the Village Board for approval.

3.3 Consideration and Discussion of Site Design, Building Elevations, Landscape Plans, Exterior Lighting, Parking, and Exterior Signage for a Proposed New Medical Office Building – 231 Olde Half Day Road (Alexander and Julia Katsnelson)

AVM/CED Gilbertson summarized the request, stating the petitioner is seeking to construct a new two-story medical office building for a dermatology, oral, and maxillofacial surgery practices. He added the petitioners presented a preliminary evaluation to the Committee of the Whole on January 12, 2019 to eliminate the 25% ground floor sales tax-generating use restriction in the B1 and B2 districts. He added both the Zoning Board and Village Board unanimously approved the text amendments to remove this restrictive code requirement, thereby allowing the petitioner to proceed with the approval process for the office building. **AVM/CED Gilbertson** stated the project is located within the downtown area as outlined in the Village's design guidelines and the petitioner has surveyed buildings throughout the Village and downtown area to incorporate multiple exterior elements into their design. **AVM/CED Gilbertson** also noted the proposed landscape plan and tree inventory. He then presented a drone video of the subject property.

Following the video, **Dr. Alexander Katsnelson** addressed the ARB summarizing both his and his wife's educational and medical background. He added the proposed medical practice will serve a need as there is not currently a joint practice in dermatology and oral surgery in the area. He added the current building is not ADA compliant. **Dr. Katsnelson** then presented plans for the office building, adding the design of the proposed building includes elements of other Lincolnshire buildings which include stone, brick, and modern elements. **Dr. Katsnelson** then presented color and material boards to the ARB. He added the main entry will be a glass tower design and a parapet wall will be used to screen mechanical equipment and a generator.

Member Santosuosso noted the trash enclosure should be moved or turned, as its current placement allows patients to view this when they first pull in. **Member Santosuosso** also commented on the weight of the generator and its placement on the roof. **Dr. Katsnelson** stated they have discussed this with a structural engineer specifically to locate the generator on the roof with appropriate reinforcement. **Member Orzekse** also suggested another location for the generator. **Deborah Fox,** architect for the petitioner, said they are still working with the structural engineer on the roof structure. Emphasis has been on the exterior design, but they were aware of the concerns of the generator placement and will possibly consider another location on the ground.

Member Orzeske questioned the notes on the plan for future plumbing in the basement level. He also asked for clarification on the brick sample presented. **Ms. Fox** noted the sample is presented for color only; the actual size will be

different. **Member Orseske** asked about the canopy over the door and how will it drain. **Ms. Fox** stated the awnings are aluminum and will have a way to drain water. **Member Orzeske** stated he would prefer a standing seam roof versus the architectural shingles as proposed. **Ms. Fox** replied they included architectural shingles to be similar to other buildings in the area. **Member McCall** concurred with **Member Orzeske's** comments on the roofing material and also relocation of the trash enclosure. There was discussion regarding turning radius as it relates to the trash enclosure. **AVM/CED Gilbertson** said this is something the petitioner's design team will provide to the ARB.

Member Baskin commented that this building has too many design elements. He was concerned with the rooftop units and parapet height. He also agreed with the comments made by the other ARB members regarding the roof materials. **Member Baskin** said the petitioner should reevaluate the proposed landscaping at the building entrance.

Member Santosuosso moved, seconded by **Member McCall** to table the request for 231 Olde Half Day Road to the next regularly-scheduled ARB meeting and to work with staff on the ARB's recommended changes. Motion passed unanimously by voice vote.

4.0 UNFINISHED BUSINESS

None.

5.0 NEW BUSINESS

AVM/CED Gilbertson noted the September regularly scheduled meeting of September 17th will be moved to September 24th.

Member Baskin inquired about the building under construction at 325 Marriott Drive. Chair Kennerley noted the building is still under construction, and that painting and landscaping have not been completed.

6.0 CITIZENS COMMENTS

7.0 ADJOURNMENT

There being no further business, the meeting adjourned at 8:56 p.m.

Respectfully Submitted,
Carol Lustig
Administrative Assistant, Community & Economic Development Department

DRAFT

Village of Lincolnshire

Agenda Item 3.1 ARB

REQUEST FOR BOARD ACTION
Architectural Review Board
August 20, 2019

Subject:	New Medical Office Building – 231 Olde Half Day Road
Action Requested:	Continued Consideration and Discussion of Site Design, Building Elevations, Landscape Plans, Exterior Lighting, Parking, and Exterior Signage for a Proposed New Medical Office Building
Petitioners:	Alexander and Julia Katsnelson
Originated By/Contact:	Ben Gilbertson, Assistant Village Manager/CED Director
Advisory Board Review:	Architectural Review Board

Background:

- The Architectural Review Board (ARB) reviewed the site design, building elevations, landscaping, exterior lighting, parking, and exterior signage for a proposed medical office at 231 Olde Half Day Road at its July 16, 2019 meeting. The ARB unanimously approved a motion to continue the review until its next regularly scheduled meeting on August 20, 2019 to allow the petitioner to address the ARB's comments and revise the plans. The ARB provided feedback to the petitioner, as summarized below:

  - Reconsider the location of the trash enclosure;
  - Evaluate the feasibility of moving the rooftop generator to a ground-mounted location;
  - Increase the size of the brick used for the building;
  - Revise the canopy materials over the main entrance; and
  - Reexamine landscaping throughout the site, and particularly at the building entrance.

Trash Enclosure Location

- The Petitioner determined the originally-proposed location of the trash enclosure at the southwest corner of the property was ideal for access into and out of the site (as depicted in the resubmitted auto-turn exhibits). Staff recommends this location as well, given the difficulty for a garbage truck to back into the site. In an effort to "soften" the view of the trash enclosure when patients arrive at the site, the Petitioner has adjusted orientation of the trash enclosure gates to the east and modified the building materials for the enclosure to match the brick used in the building. The width of the enclosure has also been reduced from 24' to 14' to accommodate the new orientation. The length of the enclosure has been reduced from 12' to 11' as well. The petitioner has also provided landscape screening along the north, west, and south elevations of the trash enclosure.

Generator

- Per the ARB's direction, the Petitioner explored a ground-mounted location for the generator, as opposed to the original rooftop location. However, given the dimensions of the property, as well as the building footprint, the only potential location for a ground-mounted generator is the northeast corner of the property. This location is not permitted for ground-mounted mechanical equipment, as Section 6-15-3-E-2-a of the Lincolnshire Village

Code (Village Code) states "[g]round-mounted mechanical equipment and associated screens are prohibited in required yard setback areas and shall not extend beyond any front or corner-side façade of the primary structure." As such, the Petitioner proposes placing the generator on the roof per the original proposal. The generator and other rooftop units must still be entirely screened from pedestrian view. Concerns regarding weight of rooftop units would be resolved during the building permitting stage of review (should the Village Board ultimately approve the proposal). Staff recommends this location for the generator.

Building Materials and Design

- The Petitioner proposes to use a larger Norman brick as the primary building material, which is a change from the previously-proposed thin brick. The petitioner has also incorporated a Norman brick soldier course band around the top of the building near the roofline. The main entrance has also been revised, such that the curved roof with architectural shingles has been flattened and now incorporates anodized metal coping. The canopy has also been modified with anodized aluminum, which matches the emergency exit door awnings.

Ground Sign Materials

- The petitioner has incorporated the Norman brick into the ground sign to match the building materials.

Landscaping

- The Petitioner made minor changes to the proposed landscaping plans, which are identified below:
  - Removal of two Armstrong Red Maples (one 4" and one 2.5')
  - Removal of four Dark American Arborvitae (8')
  - Addition of nine Ground Mound Alpine Currant
  - Addition of two hydrangea
  - Reduction of three Grow-Low Fragrant Sumac

Approval Process

1. Preliminary Evaluation at the Village Board. **COMPLETED**
2. The Zoning Board will hold a public hearing on the text amendment request. **COMPLETED**
3. The Village Board will consider the Zoning Board's recommendation on the text amendment and make a final determination. **COMPLETED**
4. The ARB will review the site and building design, landscaping, signage, lighting, and site amenities. **CURRENT STAGE OF APPROVAL**
5. The Village Board will consider the ARB's recommendations regarding site and building design, landscaping, signage, lighting, and site amenities and make a final determination on the new construction. **TO BE HELD AT A FUTURE DATE**

Recommendation:

Staff recommends the ARB determine whether all of the above ARB requests have been satisfactorily addressed prior to making a recommendation to the Village Board.

Motion:
The Architectural Review Board moves to recommend approval to the Village Board the proposed development plans depicting site design, building elevations, parking, landscaping, exterior lighting, and exterior signage for a proposed new medical office building, located at 231 Olde Half Day Road, as presented in the petitioner's presentation packet, date stamp received August 14, and as depicted in the material/color sample board provided at the August 20, 2019 Architectural Review Board meeting, and further subject to…

[Insert any additional conditions or modifications]

Reports and Documents Attached:
- Document 1: Presentation packet, prepared by Alexander and Julia Katsnelson Sara E.F. Gensburg, Ltd., date stamped received August 14, 2019.
- Document 2: Lincolnshire Downtown Design Guidelines, approved November 23, 2015.
- Document 3: Staff memorandum to the ARB for its July 16, 2019 meeting.

Meeting History	
Committee of the Whole – Preliminary Evaluation (Text Amendment)	January 14, 2019
Committee of the Whole – Preliminary Evaluation (Site Plan and Building Elevations)	March 18, 2019
Zoning Board – Public Hearing (Text Amendment)	June 25, 2019
Regular Village Board – Text Amendment Approval	July 8, 2019
Architectural Review Board – Site Design Consideration and Discussion	July 16, 2019
Architectural Review Board – Continued Site Design Consideration and Discussion	August 20, 2019

Document 1

August 12, 2019

Chair Kennerley
Architectural Review Board Members
1 Olde Half Day Rd,
Lincolnshire, IL 60069

In this letter we would like to resubmit our proposal for a new building at the following address: 231 Olde Half Day Road, Lincolnshire, Illinois.

We reviewed with our team the committee's suggestions and made the following changes (*in italic*):

1. Currently when the visitor drives into the entrance, the first thing they will see is the trash enclosure. Access into and out of the site for garbage trucks and/or emergency vehicles should be demonstrated so that the ARB has a sense of the best and/or most practical location for the trash enclosure.
Please see the attached scheme of the entrance of the emergency vehicles and garbage truck (A). The only way for a garbage truck to enter is by backing up (please see the scheme). If we move the trash enclosure to the farthest corner, it force the garbage truck to not only back into the property but also make a turn, this would be very difficult for the truck to do. Therefore, we are proposing to rotate the trash enclosure so that the opening won't be visible when entering the parking lot (B,C) and use brick and stone (similar to the building) to build the trash enclosure. But if the committee would like, we will move the trash enclosure to the southeast corner (D).

2. (Note: this is next point is entirely up to you as the ARB is responsible only for reviewing the aesthetic features of a site, not necessarily the engineering.) If possible, remove the generator from the rooftop. Situate it somewhere on the ground. To reinforce the roof is more expensive, the potential for noise and vibration is higher, as well as more difficult to service. (Again this is up to you, but you'll need to tell the ARB why you made a decision either way at the next meeting.)

Unfortunately, there is no space available to place the generator on the ground. We will not have a generator.

3. Increase the size of the brick, as it will be more cost effective as well as provide a better look for the building.

We increased the size of the brick to Norman (3 5/8 by 2 1/5 by 11 5/8 brick) which we will present to the committee.

Document 1

4. Consideration for the canopy and drainage/runoff. This needs to be addressed with the rain, snow, or even debris falling from the canopy.

We will have a runoff from the canopies and we will show the design to the committee.

5. Revise the landscape plan so there is a focus point near the entrance, as opposed to placing two trees on the edges of the building creating symmetry. Articulate the vision for the landscaping. Vary the height and interest throughout the site.

Throughout our site we will plant 25 different trees/shrubs and other plants. They vary in color and height, and our landscape architect will present it at the next meeting. She will also concentrate on the focal point for the entrance and elaborate on her design.

6. Remove the dark shingles. Replace the accent with the matching steel. This should be a flat roof and treated as such.

We removed the shingles.

In addition to these comments, we reviewed the overall design of the building. The parapet of the entrance was changed to straight from curved and we added an additional band of stone on top of the windows. These changes streamline and accentuate the central concept for the design of our building.

Please consider approving the architectural design for our future combined Dermatology, and Oral and Maxillofacial Surgery office.

Thank you very much,

Drs. Alexander and Julia Katsnelson

Document 1

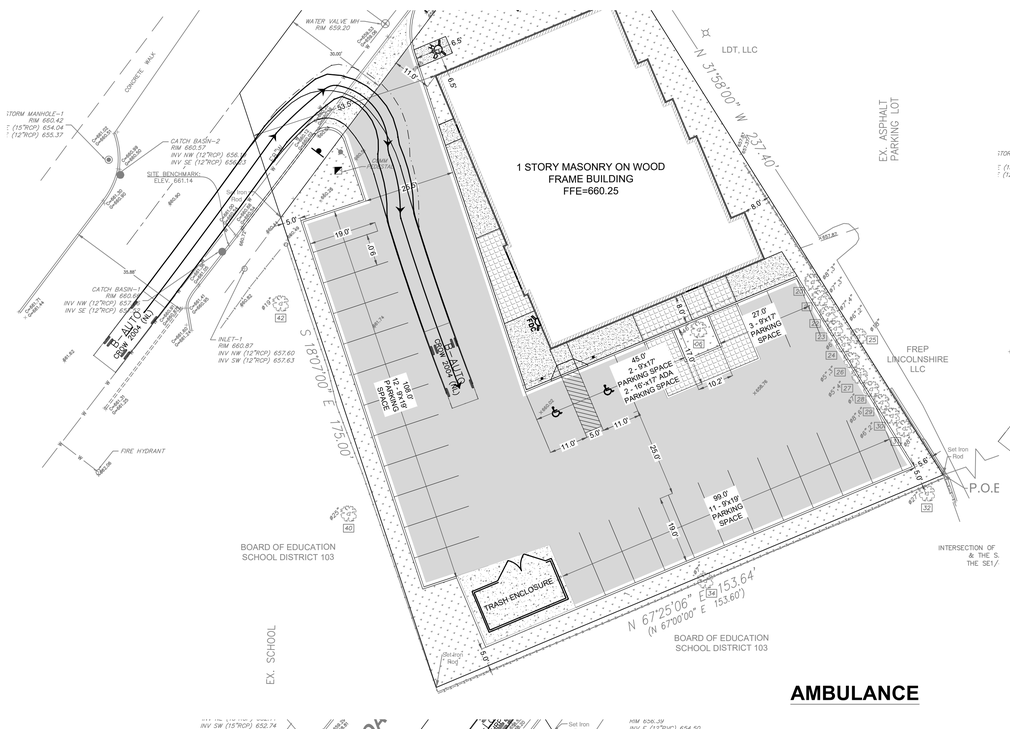

AMBULANCE

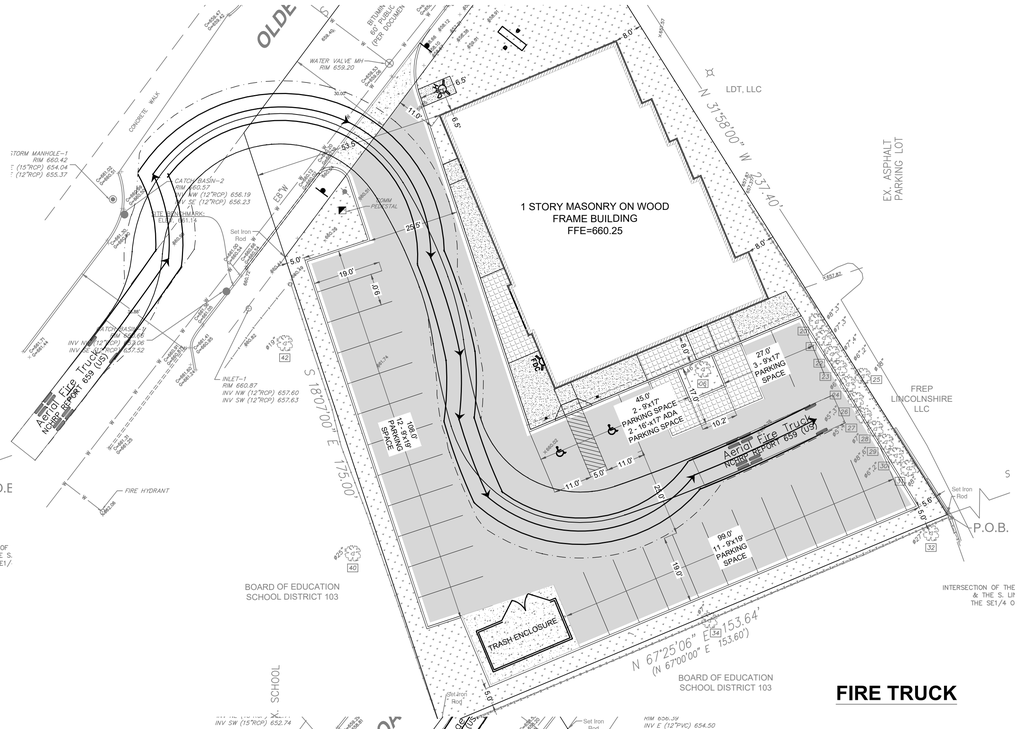

FIRE TRUCK

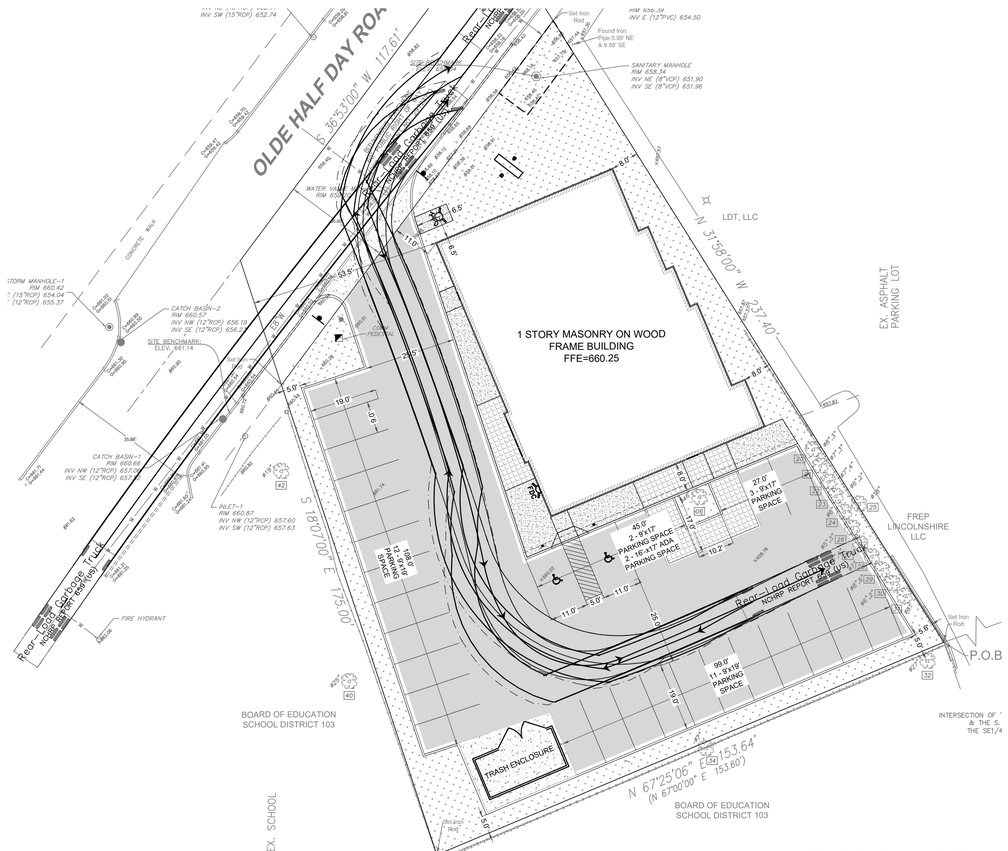

GARBAGE TRUCK-1

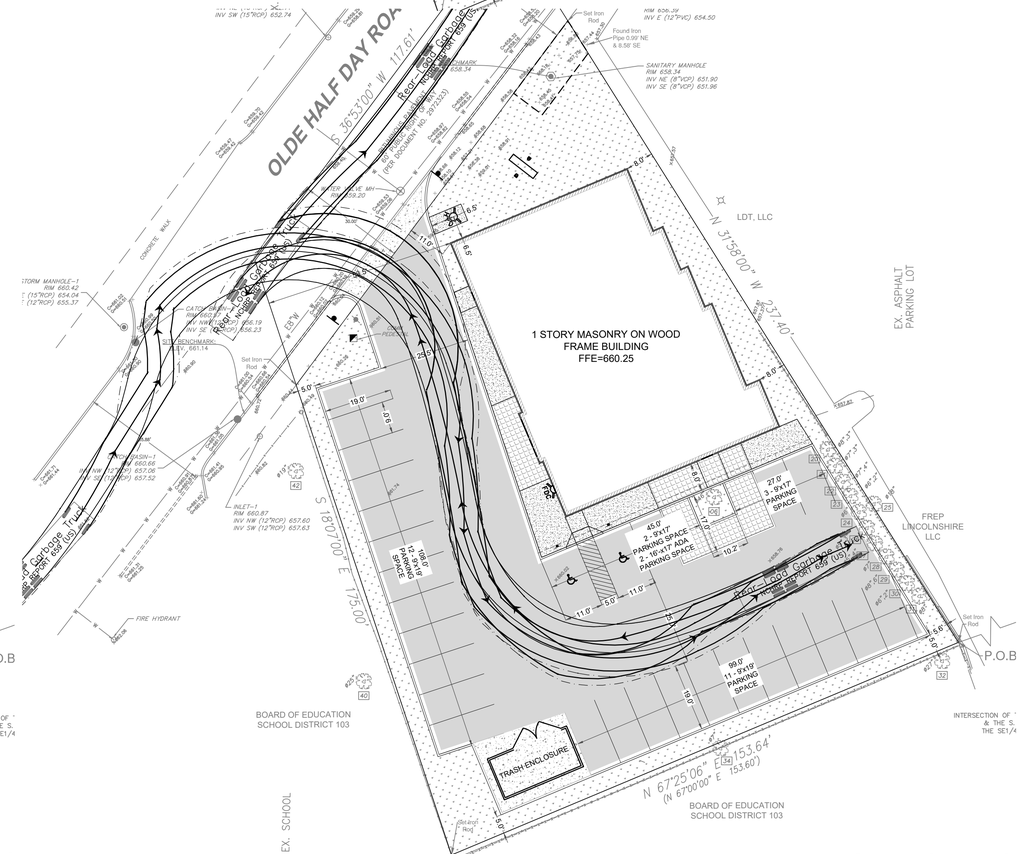

GARBAGE TRUCK-2

A

NORTH

PROJECT STAFF		ISSUE	REVISIONS	DATE
PROJECT MANAGER:	R. WALKER P.E.	1	ISSUE FOR PERMIT	7/23/2019
ENGINEER:	M. WANG			
ENGINEER:				
TECHNICIAN:				

BCI
BONO CONSULTING, INC.
CIVIL ENGINEERS
1018 BUSSE HIGHWAY PH : (847) 823-5300
PARK RIDGE, IL 60068 FAX : (847) 823-5303
bcinc@bonoconsulting.com

EXHIBIT

231 OLDE HALF DAY RD, LINCOLN SHIRE, IL

MEDICAL OFFICE

COPYRIGHT:
THIS DRAWING SHALL NOT BE USED, REPRODUCED, MODIFIED OR SOLD EITHER WHOLLY OR IN PART, EXCEPT WHEN AUTHORIZED IN WRITING BY THE ENGINEER.

PROJECT NO.:	19043
BASE FILE:	
SHEET FILE:	
ISSUE DATE:	Jul. 23, 2019
SCALE:	1"=20'-0

SHEET NUMBER

EX-1

Document 1

B

Document 1

C

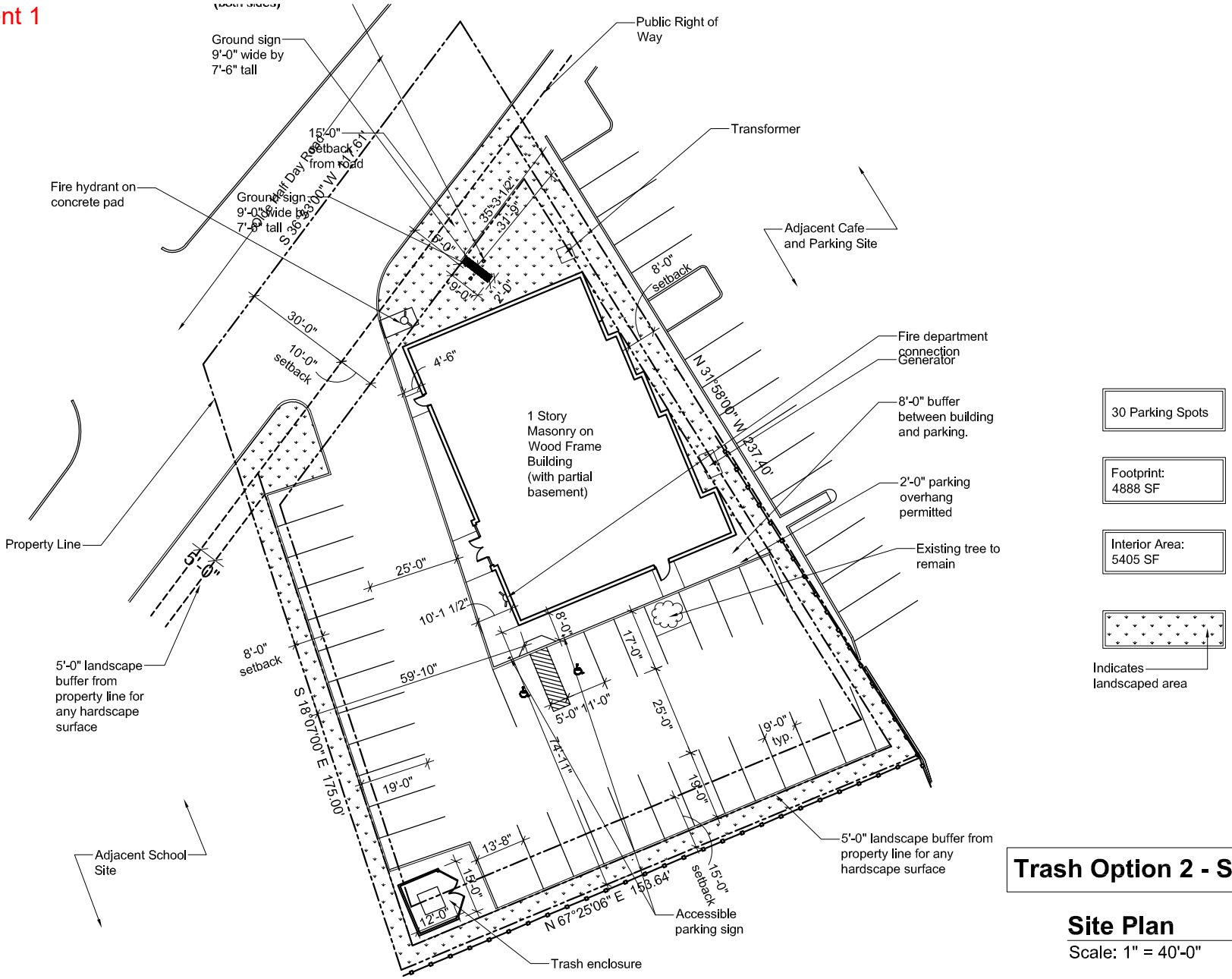

Trash Option 2 - SW corner rotated

Site Plan

Scale: 1" = 40'-0"

North

07-24-2019

MEDICAL OFFICE BUILDING
231 OLDE HALF DAY ROAD
LINCOLNSHIRE, ILLINOIS

Sara E.F. Gensburg, Ltd.
Architecture/Design
105 Revere Drive, Suite G
Northbrook, IL 60062
Fax: (847) 715-9581
Phone: (847) 715-9591

Document 1

D

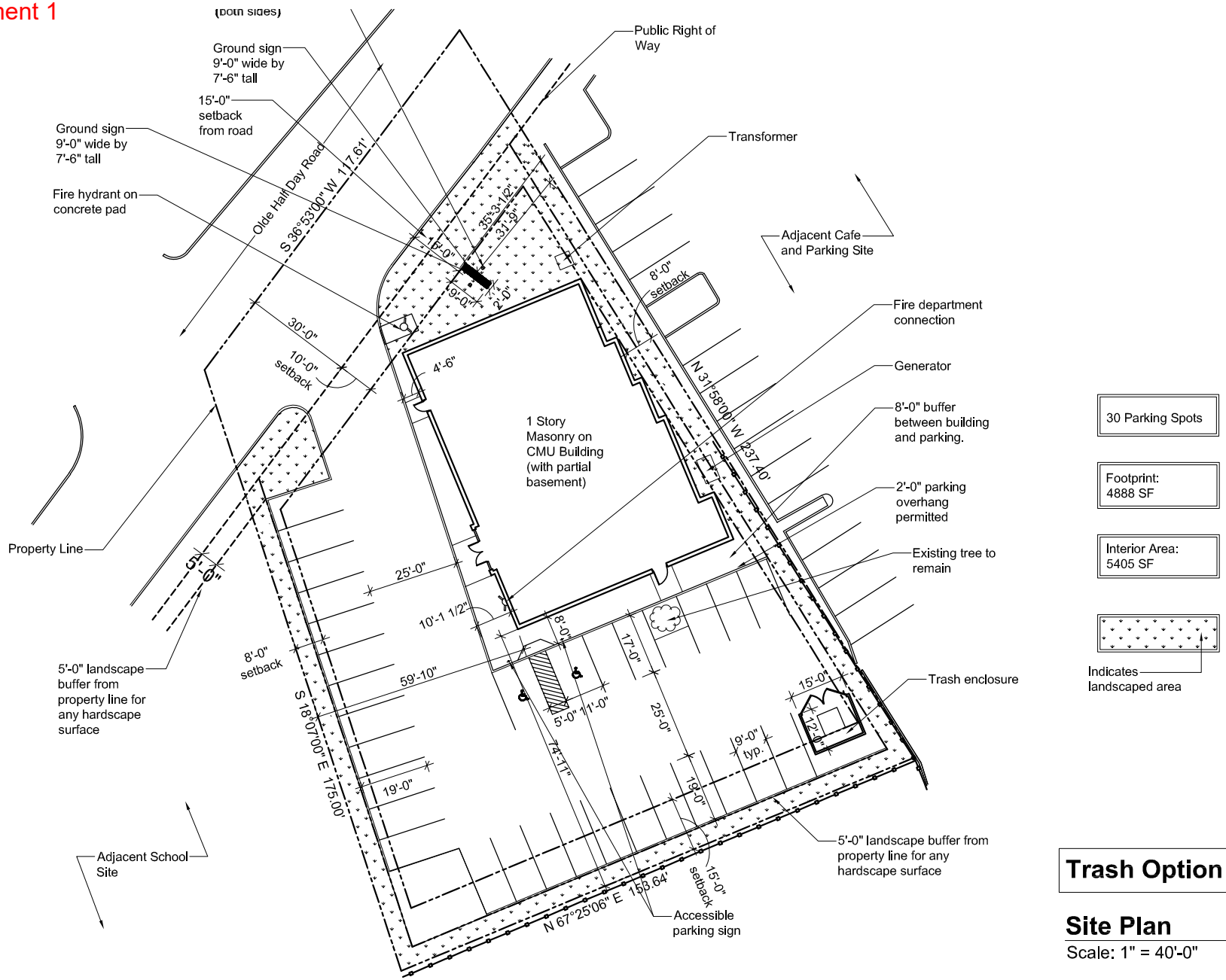

30 Parking Spots

Footprint: 4888 SF

Interior Area: 5405 SF

Indicates landscaped area

Trash Option 1 - SE corner

Site Plan

Scale: 1" = 40'-0"

North

07-24-2019

MEDICAL OFFICE BUILDING
231 OLDE HALF DAY ROAD
LINCOLNSHIRE, ILLINOIS

Sara E.F. Gensburg, Ltd.
Architecture/Design
105 Revere Drive, Suite G
Northbrook, IL 60062
Fax: (847) 715-9581
Phone: (847) 715-9591

Document 1

Village of Lincolnshire
One Olde Half Day Road
Lincolnshire, IL 60069
847.883.8600
www.lincolnshireil.gov

PLANNING & ZONING APPLICATION

DEPARTMENT OF COMMUNITY & ECONOMIC DEVELOPMENT

Application Number: _____

PROPERTY ADDRESS: 231 Olde Half Day Road

PIN #(s): 15-15-400-039

APPLICANT NAME: Alexander and Julie Kaknelson

APPLICATION REQUEST(S) Please check all that apply

- ☑ **Amendment**
  - ☑ Text*
  - ☐ Annexation Agreement
  - ☐ Other
- ☑ **Architectural Review Board (ARB)***
  - ☑ New Structure/Development
  - ☐ Modification to Structure/Development
  - ☐ New Signage
  - ☐ Modification to Signage
- ☐ **Special Use***
  - ☐ New Special Use/PUD
  - ☐ Major Amendment to Special Use/PUD
  - ☐ Minor Amendment to Special Use/PUD
- ☐ **Appeal of Administrative Decision**
- ☐ **Annexation***
- ☐ **Rezoning***
- ☐ **Subdivision***
- ☐ **Variance***

* Refer to the applicable **Information Packet** for additional information and required materials.

DESCRIPTION OF REQUEST(S):

Request to change the B code to remove the 25% restriction non-sales tax generating uses of the ground floor area.

Attach additional pages if necessary

Document 1

APPLICANT INFORMATION

Applicant Information

Name: Alexander and Julia Katsnelson
Company:
Address: 488 Thorndale Drive
Buffalo Grove, IL, 60089
Telephone: (847) 9029977
Fax: ( )
Email Address: alex@katsnelson.net

Primary Contact Information *(if different than Applicant Info)*

Name:
Company:
Address:
Telephone: ( )
Fax: ( )
Email Address:

Property Owner Information *(if a Trust, see attached Beneficiary Disclosure Form)*

Name: NJB Real Estate, LLC
Company:
Address: 302 Saunders Road, Suite 100
Riverwoods, IL 60015
Telephone: (847) 955-1000
Fax: (847) 634-2200
Email Address: neil@tacomakers.com

REPRESENTATIVES INFORMATION

Attorney

Name:
Company:
Address:
Telephone: ( )
Fax: ( )

Architect/Land Planner

Name: Sara EF Gensburg LTD
Company:
Address: 105 Revere Dr., #6
Northbrook, IL, 60062
Telephone: (847) 715-9591
Fax: ( )

Engineer/Land Surveyor

Name:
Company:
Address:
Telephone: ( )
Fax: ( )

Landscape Architect

Name:
Company:
Address:
Telephone: ( )
Fax: ( )

Other:

Name:
Company:
Address:
Telephone: ( )
Fax: ( )

Document 1

REQUIRED MATERIALS

The materials identified below must be included with the Application, *incomplete submittals will not be accepted.* Prior to submitting an Application Packet, a pre-application meeting with the Planning Staff is recommended.

- ☐ **Letter of Request:** The Applicant must provide a letter to the attention of the Mayor and Village Board of Trustees, with this application, which describes the request(s) and outlines the reason(s) for the request(s).
- ☐ **Legal Description:** The legal description of all subject properties must be submitted in (1) an accurate and legible 8½" x 11" paper format, and (2) an electronic duplicate in Microsoft Word format.
- ☐ **Plat of Survey:** An accurate Plat of Survey prepared by a registered land surveyor or professional engineer. The Plat of Survey must include all information required by the Illinois Survey Manual.
- ☐ **Application Fee(s):** See page 4 of this Application.
- ☐ **Cash Advance Account Deposit:** See page 4 of this Application
- ☐ **Accompanying Documents Identified in Information Packet (if necessary)**

APPLICANT/OWNER ACKNOWLEDGEMENTS

The Applicant(s) and Owner(s) do hereby certify, acknowledge, and affirm that:

1. I (We) have carefully and fully read this application, and all of the statements contained in this Application Packet are true.
2. I (We) fully understand and agree to comply with the terms and provisions outlined in this application and the Lincolnshire Village Code.
3. I (We) agree to pay all applicable filing fees and assume responsibility for the payment of all reimbursable expenses associated with the processing of this application and request(s).

NJB Real Estte, LLC

Kotkowski, Alexandra, Julie L Kotkowski, Julie

By:

Signature of Applicant

Signature of Property Owner

6/24/19

7·10·19

Date

Date

Document 1

Index of Drawings

A-1	Site Plan, Site Data Chart	EX-1	Autoturn Exhibit
A-2	Floor Plans / Canopy Section		
A-3	Roof / Equipment Screening Plan	L-1	Conceptual Landscape Plan
A-4	Building Elevations		
A-5	Renderings	M-4	Roof Level HVAC Plan
A-6	Sign Plan and Site Amenities		
A-7	Colored Elevations	E-1	Electrical Site Plan
A-8	Colored Elevations	E-2	Basement Level Plan
			Site Photometrics
C-0	Existing Topography		
C-0.1	Demolition Plan		
C-1	Geometric Plan		
C-2	Grading Plan		
C-3	Utility Plan		
C-4	Details		

Building Setbacks

	Required	Provided
Front:	10'-0" from Right of Way line	10'-0"
Side:	8'-0"	8'-0" East Side 59'-10" West Side
Rear:	15'-0"	74'-11"

Surrounding Context

- (A) 2 Story School @ 239 Olde Half Day Road
- (B) 1 Story Church @ 240 Olde Half Day Road
- (C) 1 Story Restaurant @ 410 Milwaukee Avenue
- (D) 2 Story Office Building @ 430 Milwaukee Avenue
- (E) 1 Story Commercial Building @ 435 Milwaukee Avenue
- (F) 2 Story Office Building @ 440 Milwaukee Avenue
- (G) 1 Story Restaurant @ 450 Milwaukee Avenue
- (H) 1 Story Commercial Building @ 490 Milwaukee Avenue
- (I) 1 Story Restaurant @ 405 Milwaukee Avenue

Surrounding Area Map

231 Olde Half Day Road
Proposed Site Plan

Site Data

Zoning District:	B1
Proposed Use:	Medical Office Building
Min. Lot Area:	15,000 SF
Actual Lot Area:	26,422 SF
Min. Lot Width:	100'-0"
Actual Lot Width:	153'-6"
Gross Area of Site:	26,422 SF
Net Area of Site:	22,750 SF
Gross Area of Impervious Surfaces:	18,174 SF
Gross Area of Open Space:	21,534 SF
Gross Building Area:	5,405 SF
Total FAR:	.19
Max. Building Height:	2.5 stories or 30'-0"
Actual Building Height:	1 story and 20'-6"

Code Req. Parking and ADA Spaces:
Physician's Office - 1/employee + 2/exam room
9 employees = 9
10 exam rooms = 20
1 extra spot = 1
TOTAL = 30 Parking Spots

ADA Spaces required -
for 26-50 Parking Spaces = 2 ADA spaces required

Actual Provided Parking and ADA Spaces:

30 Parking Spaces provided with 2 ADA Spaces

Surrounding Architectural Context

Address	Building Type	Style	Roof Style	Materials	Special Elements	Picture
239 Olde Half Day Road	School	Colonial Modern addition	Gabled	Painted white brick Shingled roof	Arches Bell Tower	
240 Olde Half Day Road	Church		Gabled Dormers	Natural wood Brown Shingled roof	Arches Wood supports, decorative brackets	
410 Milwaukee Avenue	Restaurant	Contemporary	Gable	Natural colors Stone Red accent color	Stone details	
430 Milwaukee Avenue Oak Tree Corners	Commercial/Retail	Contemporary	Mansard	Natural colors Brick Shingled roof	Brick clad columns Arched colonnade	
440 Milwaukee Avenue	Office	Neo-Classical Postmodern	Hip roof with varying heights	Shingles	Varied roof with dormers, eyelids	
450 Milwaukee Avenue	McDonalds	Contemporary	Hip roof with varying heights	Shingles	Varied roof heights	
405 Milwaukee Avenue	Culvers	Contemporary	Parapet Roof	Natural colors stone	Accented entry	
Miscellaneous buildings in downtown district		Contemporary	Shingled roofs	Stone lintels Stone details Wood details		
Other buildings recently built in Lincolnshire		Contemporary	Parapet roofs	Stucco Stone details		

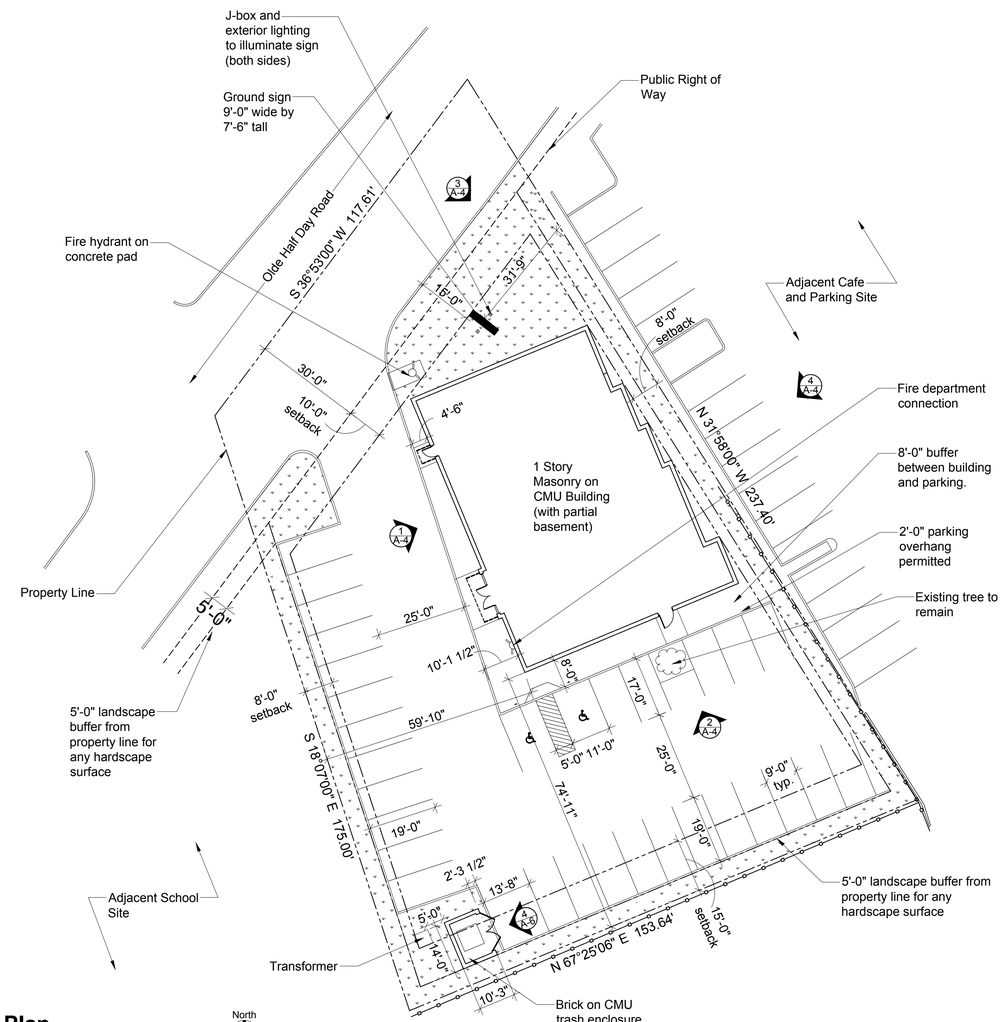

Site Plan

Scale: 1" = 20'-0"

30 Parking Spots

Footprint:
4888 SF

Interior Area:
5405 SF

Indicates landscaped area

Sara E.F. Gensburg, Ltd.
Architecture/Design
105 Revere Drive, Suite G
Northbrook, IL 60062
Fax: (847) 715-9581
Phone: (847) 715-9591

MEDICAL OFFICE BUILDING
231 OLDE HALF DAY ROAD
LINCOLNSHIRE, ILLINOIS

No.	Date:	Issued:
-	03-12-19	Issued for Preliminary Evaluation
-	04-08-19	DRT Progress Set
-	06-18-19	DRT Revision Set
-	07-16-19	Architectural Review Board Set
-	09-30-19	Architectural Review Board Set - Revised

SEFG No. 118320
Drawn: DBF
Checked: S.E.F.G.
Date: 03-04-19

SHEET:
A-1
Sheet 1 of 8

Document 1

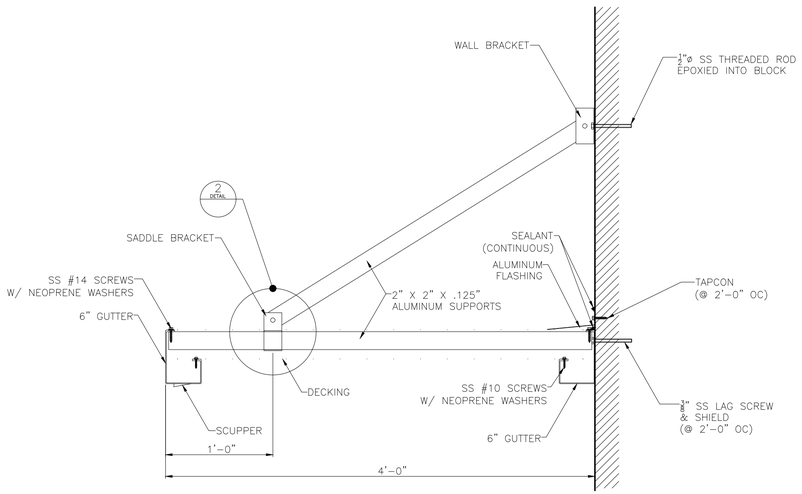

1 Section at Canopy

Scale: 3/4" = 1'-0"

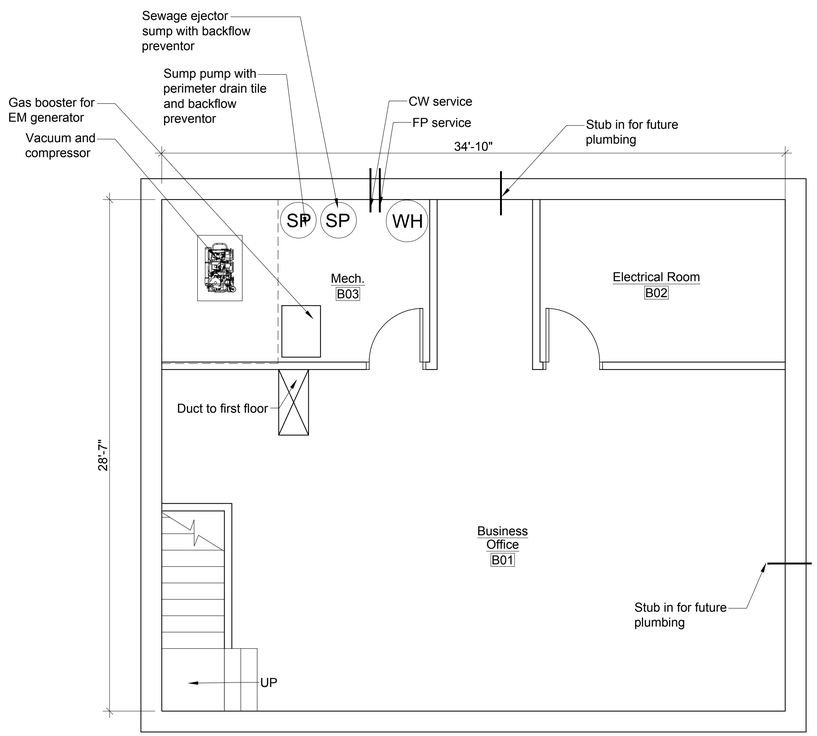

Basement Plan

Scale: 1/4" = 1'-0"

North

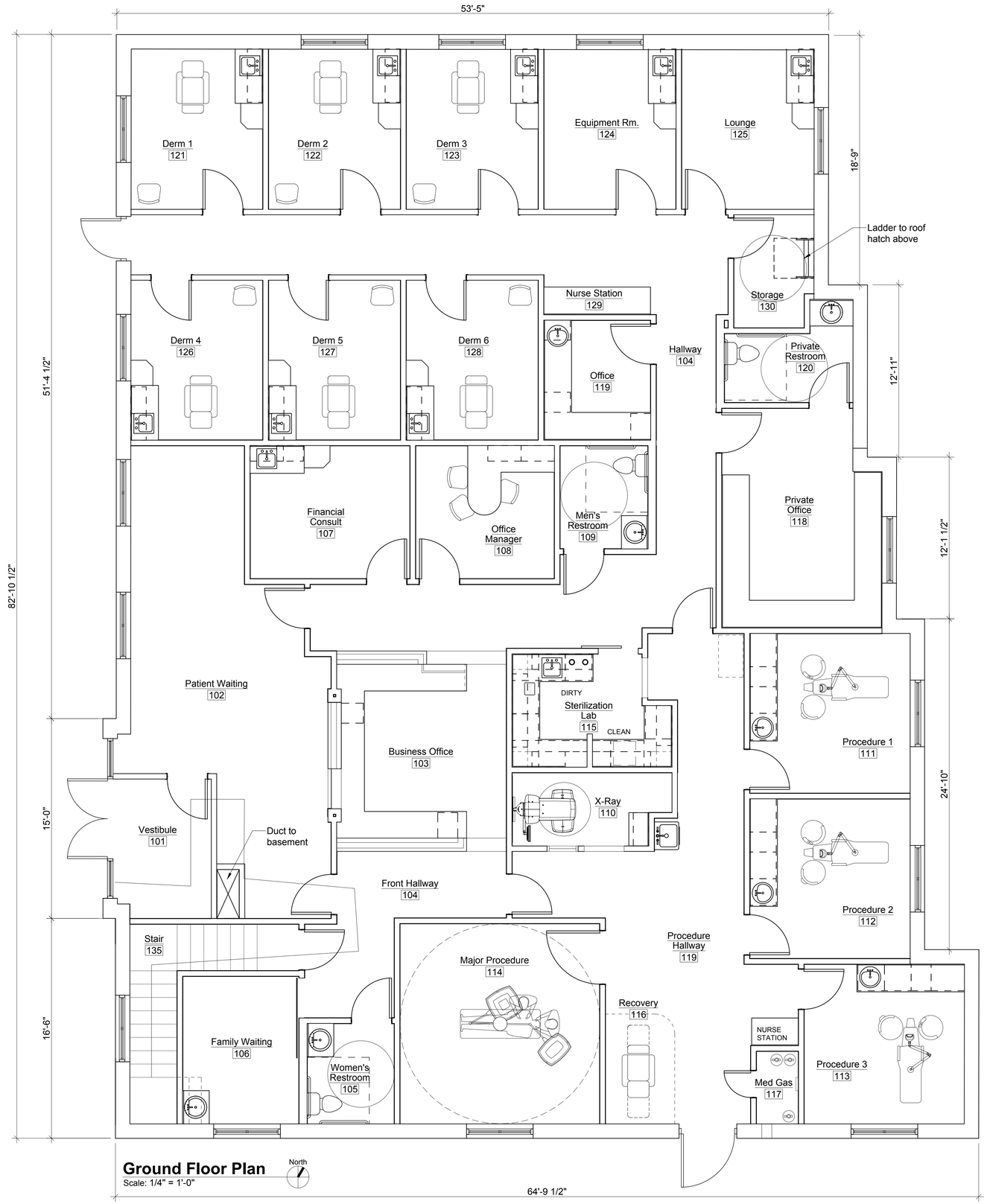

Ground Floor Plan

Scale: 1/4" = 1'-0"

North

Sara E.F. Gensburg, Ltd.
Architecture/Design
103 Revere Drive - Suite G
Northbrook, IL 60062
Fax: (847) 715-9581
Phone: (847) 715-9591

MEDICAL OFFICE BUILDING
231 OLDE HALF DAY ROAD
LINCOLNSHIRE, ILLINOIS

No.	Date:	Issued:
-	03-12-19	Issued for Preliminary Evaluation
-	04-08-19	DRT Progress Set
-	06-18-19	DRT Revision Set
-	07-16-19	Architectural Review Board Set
-	08-20-19	Architectural Review Board Set - Revised

SEFG No. 118320
Drawn: DBF
Checked: S.E.F.G.
Date: 03-04-19

SHEET: **A-2**

Sheet 2 of 8

Document 1

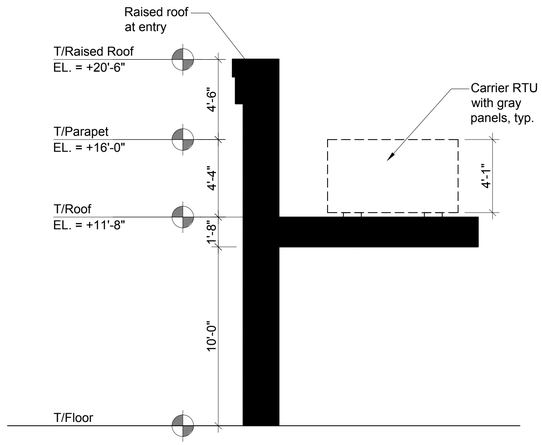

2 **Screening Section**
Scale: 1/4" = 1'-0"

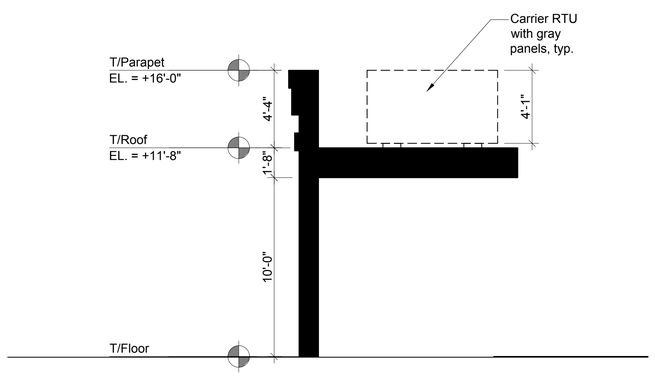

1 **Screening Section**
Scale: 1/4" = 1'-0"

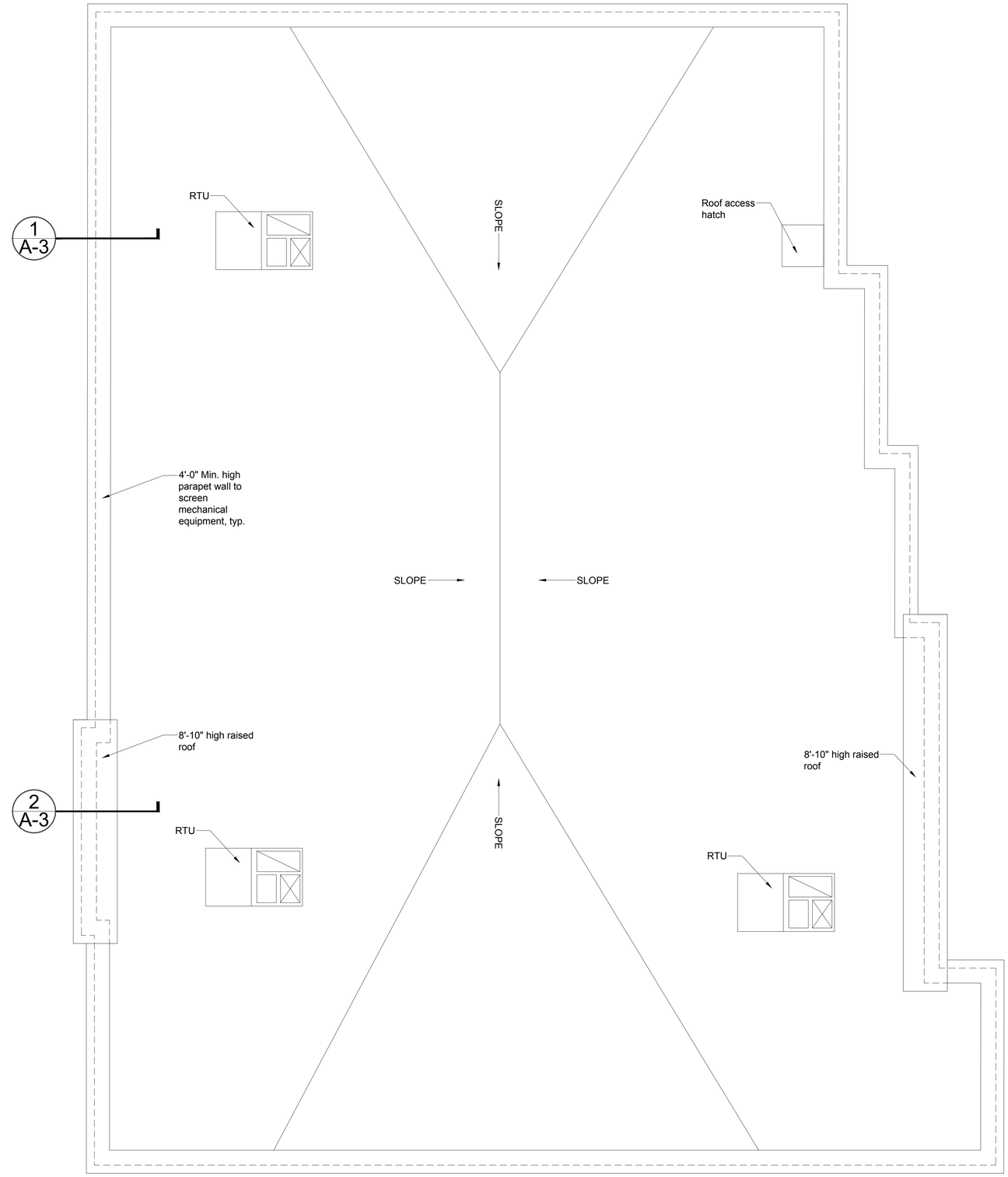

Roof/Equipment Screening Plan
Scale: 1/4" = 1'-0"
North

Sara E.F. Gensburg, Ltd.
Architecture/Design
105 Revere Drive - Suite G
Northbrook, IL 60062
Fax: (847) 715-9581
Phone: (847) 715-9591

MEDICAL OFFICE BUILDING
231 OLDE HALF DAY ROAD
LINCOLNSHIRE, ILLINOIS

No.	Date:	Issued:
-	03-12-19	Issued for Preliminary Evaluation
-	04-08-19	DRT Progress Set
-	06-18-19	DRT Revision Set
-	07-16-19	Architectural Review Board Set
-	08-20-19	Architectural Review Board Set - Revised

SEFG No. 118320
Drawn: DBF
Checked: S.E.F.G.
Date: 03-04-19

SHEET:
A-3

Sheet 3 of 8

Document 1

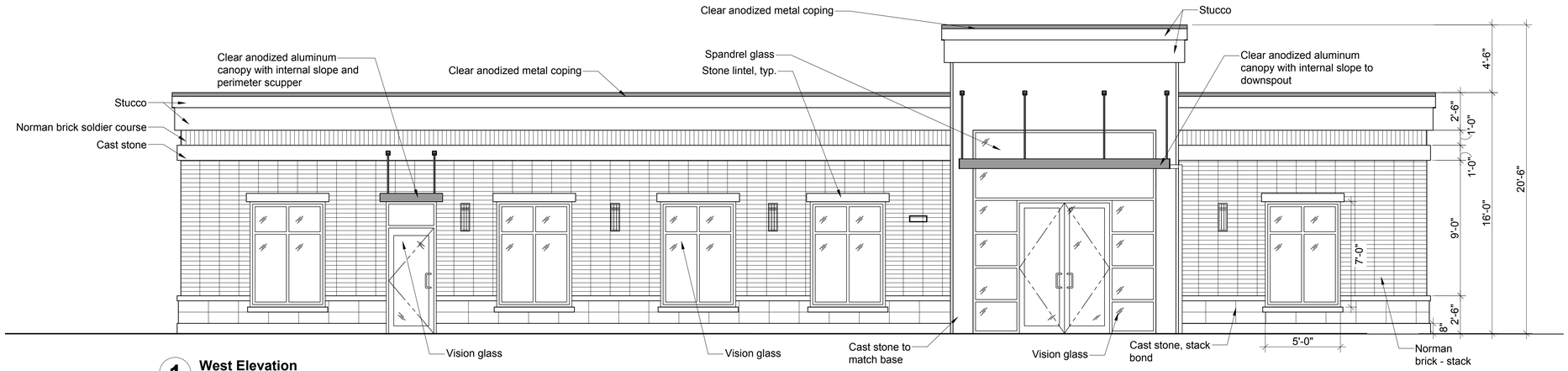

1 **West Elevation**
Scale: 1/4" = 1'-0"

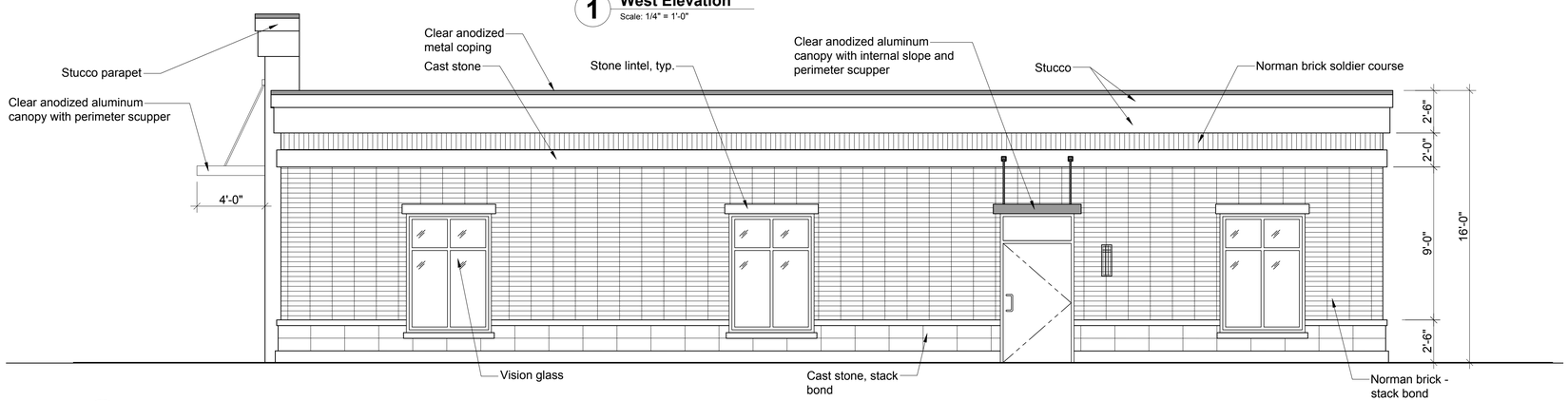

2 **South Elevation**
Scale: 1/4" = 1'-0"

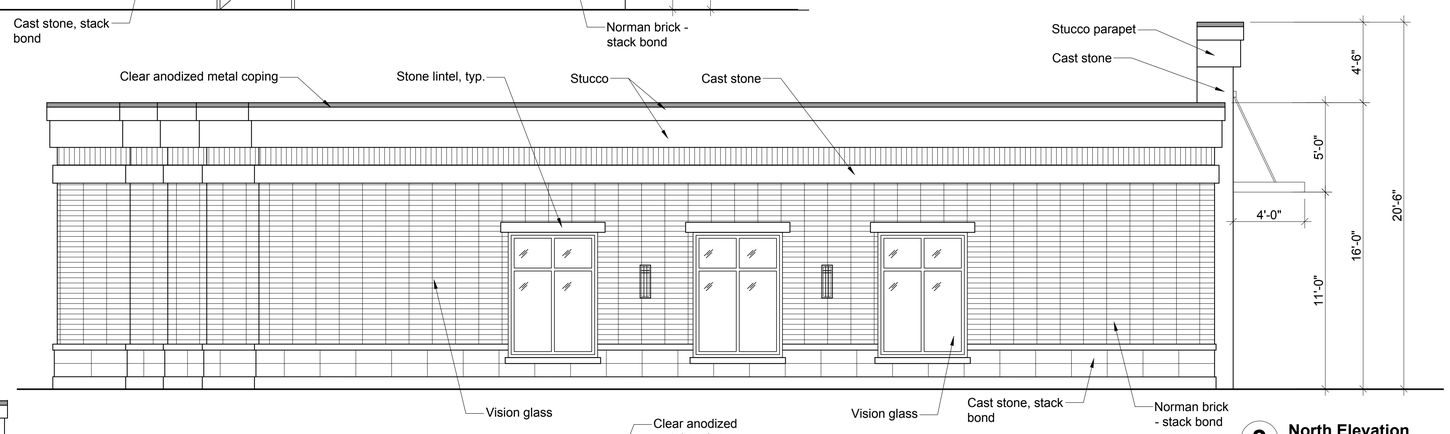

3 **North Elevation**
Scale: 1/4" = 1'-0"

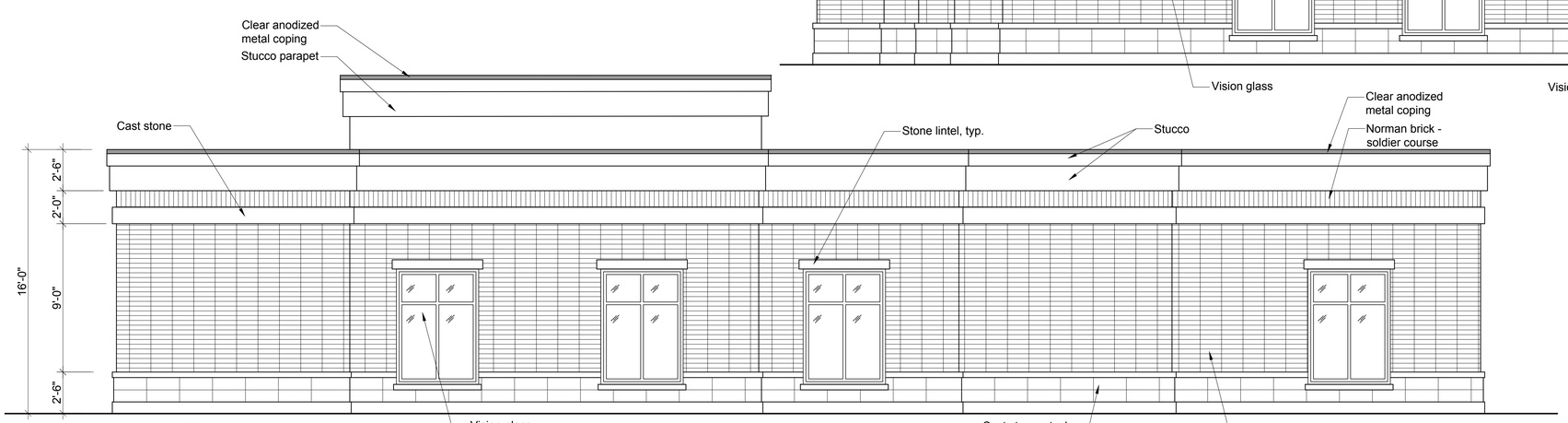

4 **East Elevation**
Scale: 1/4" = 1'-0"

Sara E.F. Gensburg, Ltd.
Architecture/Design
105 Revere Drive - Suite G
Northbrook, IL 60062
Fax: (847) 715-9581
Phone: (847) 715-9591

MEDICAL OFFICE BUILDING
231 OLDE HALF DAY ROAD
LINCOLNSHIRE, ILLINOIS

No.	Date:	Issued:
-	03-12-19	Issued for Preliminary Evaluation
-	04-08-19	DRT Progress Set
-	06-18-19	DRT Revision Set
-	07-16-19	Architectural Review Board Set
-	08-20-19	Architectural Review Board Set - Revised

SEFG No. 118320
Drawn: DBF
Checked: S.E.F.G.
Date: 03-04-19

SHEET: **A-4**

Sheet 4 of 8

Document 1

1 View from Olde Half Day Road
Not to Scale

2 View of Entry to Site
Not to Scale

Sara E.F. Gensburg, Ltd.
Architecture/Design
1051 Pawnee Drive - Suite G
Northbrook, IL 60062
Fax: (847) 715-9581
Phone: (847) 715-9591

MEDICAL OFFICE BUILDING
231 OLDE HALF DAY ROAD
LINCOLNSHIRE, ILLINOIS

No.	Date:	Issued:
-	03-12-19	Issued for Preliminary Evaluation
-	04-08-19	DRT Progress Set
-	06-18-19	DRT Revision Set
-	07-16-19	Architectural Review Board Set
-	08-20-19	Architectural Review Board Set - Revised

SEFG No. 118320	SHEET:
Drawn: DBF	A-5
Checked: S.E.F.G.	
Date: 03-04-19	Sheet 5 of 8

Document 1

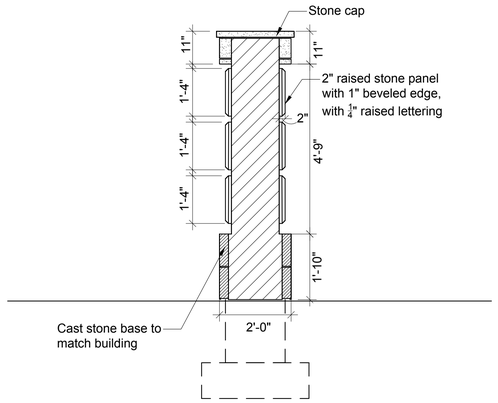

3 Ground Sign Section
Scale: 1/2" = 1'-0"

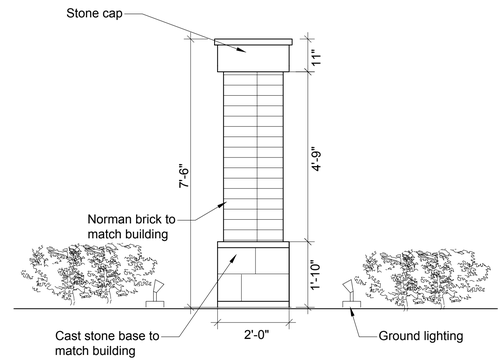

2 Ground Sign Elevation - North and South Sides
Scale: 1/2" = 1'-0"

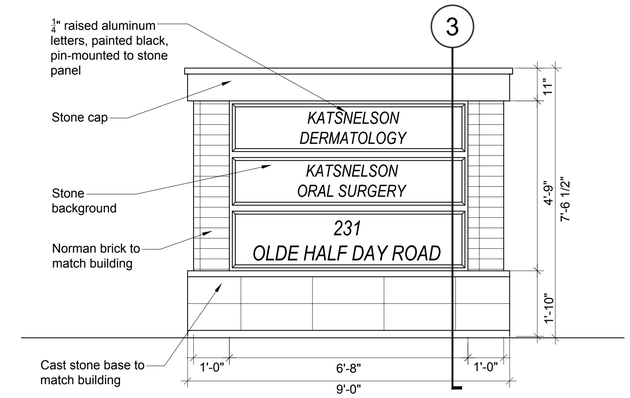

1 Ground Sign Elevation - East and West Sides
Scale: 1/2" = 1'-0"

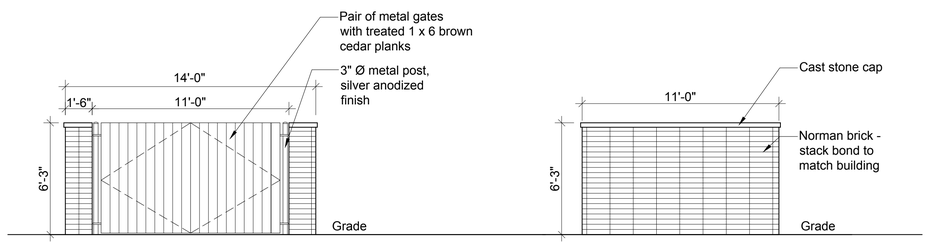

4 Trash Enclosure Elevations
Scale: 1/4" = 1'-0"

5 Line of Sight View
Not to Scale

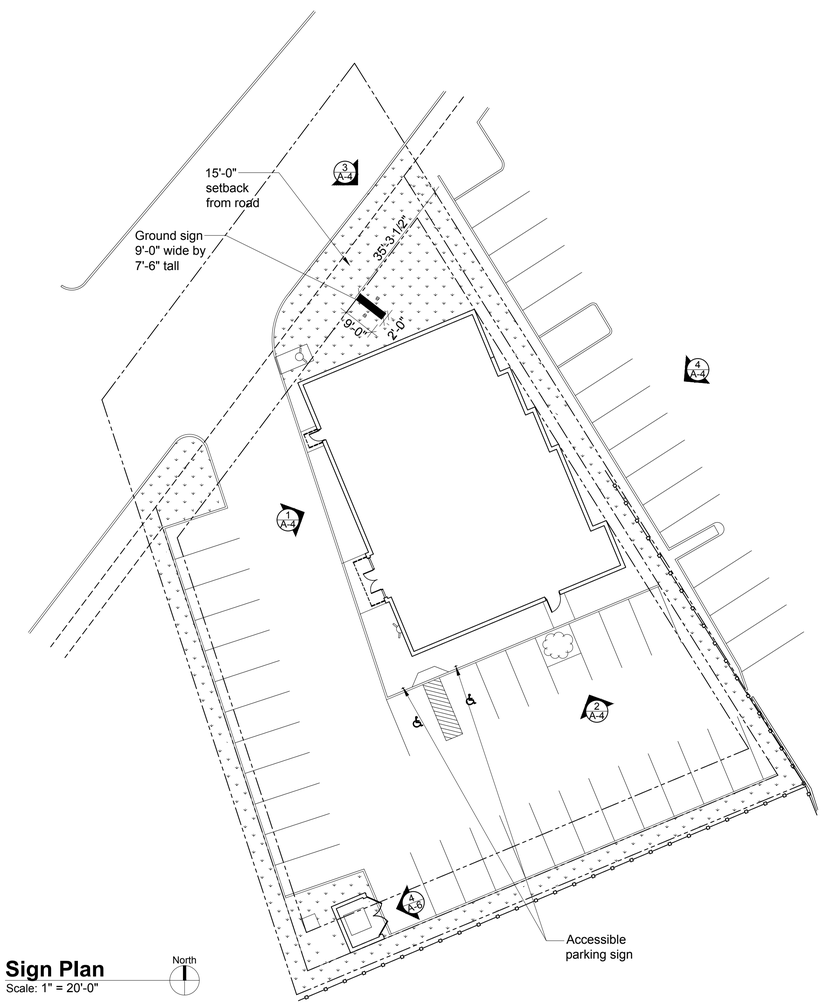

Sign Plan
Scale: 1" = 20'-0"

Sara E.F. Gensburg, Ltd.
Architecture/Design
105 Revere Drive, Suite G
Northbrook, IL 60062
Fax: (847) 715-9581
Phone: (847) 715-9591

MEDICAL OFFICE BUILDING
231 OLDE HALF DAY ROAD
LINCOLNSHIRE, ILLINOIS

No.	Date:	Issued:
-	03-12-19	Issued for Preliminary Evaluation
-	04-08-19	DRT Progress Set
-	06-18-19	DRT Revision Set
-	07-16-19	Architectural Review Board Set
-	08-20-19	Architectural Review Board Set - Revised

SEFG No. 118320
Drawn: DBF
Checked: S.E.F.G.
Date: 03-04-19

SHEET: **A-6**

Sheet 6 of 8

Document 1

1 West Elevation with Color
Scale: 1/4" = 1'-0"

2 South Elevation with Color
Scale: 1/4" = 1'-0"

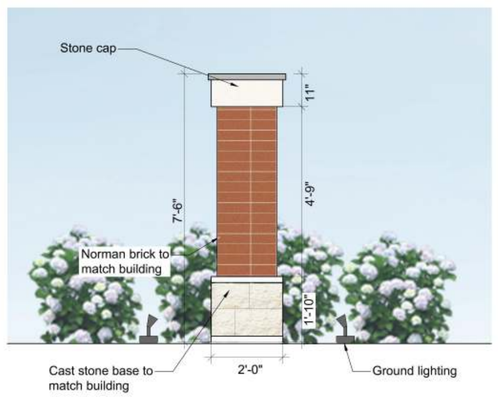

3 Ground Sign Elevation - North and South with Color
Scale: 1/2" = 1'-0"

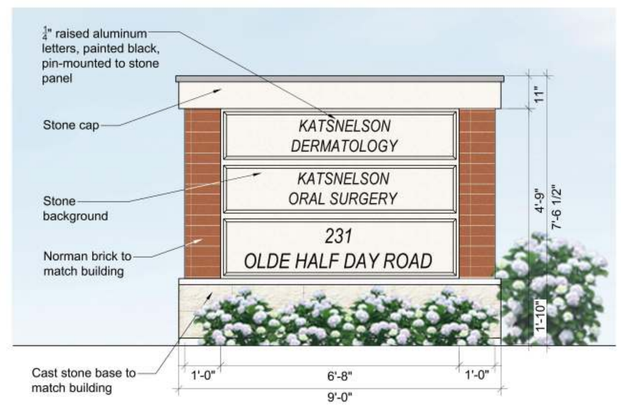

4 Ground Sign Elevation - East and West with Color
Scale: 1/2" = 1'-0"

Sara E.F. Gensburg, Ltd.
Architecture/Design
105 Revere Drive, Suite G
Northbrook, IL 60062
Fax: (847) 715-9581
Phone: (847) 715-9591

MEDICAL OFFICE BUILDING
231 OLDE HALF DAY ROAD
LINCOLNSHIRE, ILLINOIS

No.	Date:	Issued:
-	03-12-19	Issued for Preliminary Evaluation
-	04-08-19	DRT Progress Set
-	06-16-19	DRT Revision Set
-	07-16-19	Architectural Review Board Set
-	08-20-19	Architectural Review Board Set - Revised

SEFG No. 118320
Drawn: DBF
Checked: S.E.F.G.
Date: 03-04-19

SHEET: **A-7**

Sheet 7 of 8

Document 1

1 North Elevation with Color
Scale: 1/4" = 1'-0"

2 East Elevation with Color
Scale: 1/4" = 1'-0"

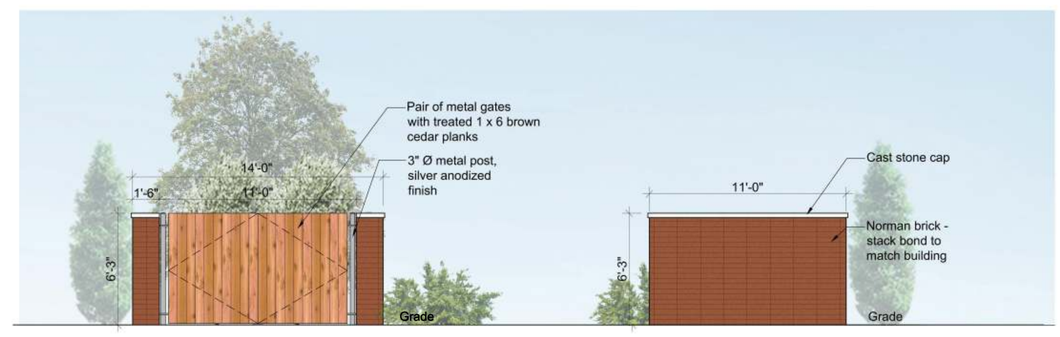

3 Trash Enclosure Elevations with Color
Scale: 1/4" = 1'-0"

Sara E.F. Gensburg, Ltd.
Architecture/Design
105 Revere Drive, Suite G
Northbrook, IL 60062
Fax: (847) 715-9581
Phone: (847) 715-9591

MEDICAL OFFICE BUILDING
231 OLDE HALF DAY ROAD
LINCOLNSHIRE, ILLINOIS

No.	Date:	Issued:
-	03-12-19	Issued for Preliminary Evaluation
-	04-08-19	DRT Progress Set
-	06-18-19	DRT Revision Set
-	07-16-19	Architectural Review Board Set
-	08-20-19	Architectural Review Board Set - Revised

SEFG No. 118320
Drawn: DBF
Checked: S.E.F.G.
Date: 03-04-19

SHEET: **A-8**

Sheet 8 of 8

Document 1

GENERAL NOTES:

1. The contractor is responsible for contacting JULIE for utility locates a minimum of 48 hours in advance of beginning excavation.
2. The contractor is solely responsible for safety on the job site.
3. The contractor shall be required to obtain all necessary permits as required, prior to commencing construction.
4. The Illinois Department of Transportation " Standard Specifications for Road and Bridge Construction", latest edition, and all addenda thereto, and Village of Bolingbrook requirements shall govern the earthwork and paving work under this contract.
5. The " Standard Specifications for Water and Sewer Main Construction in Illinois," latest edition, shall govern the underground work under this contract, except as modified by these specifications, or where in conflict with Village of Lincolnshire Standards.
6. All work shall be conducted in accordance with OSHA requirements and Village of Lincolnshire regulations and standards,and shall confirm in all respects to all state and federal laws and regulations. The contractor is solely responsible for safety on job site.
7. The Contractors shall notify all utility companies for filed locations of their facilities prior to beginning construction. The Contractor will be responsible for the maintenance and preservation of these facilities. Any utility locations shown on the plans are based on available records and are for general direction only.
8. Construction operation shall be conducted in such a way as to prevent tracking of mud or soil, debris, asphalt and concrete onto public thoroughfares. At the end of each day, the contractor shall remove materials deposited onto public streets and alleys.
9. Public streets and alleys shall be restored promptly meeting Village of Lincolnshire standards and specifications.
10. The contractor shall verify the exact elevation and location of all existing utilities and appurtenances prior to construction, to avoid interferences.
11. Appropriate precautions shall be taken to avoid damage to and to protect existing utilities and appurtenances in the vicinity of work.
12. All building layouts should be done by a registered land surveyor after confirming the property corners in the field. Any discrepancies should be brought to the attention of the design engineer prior to initiating construction.

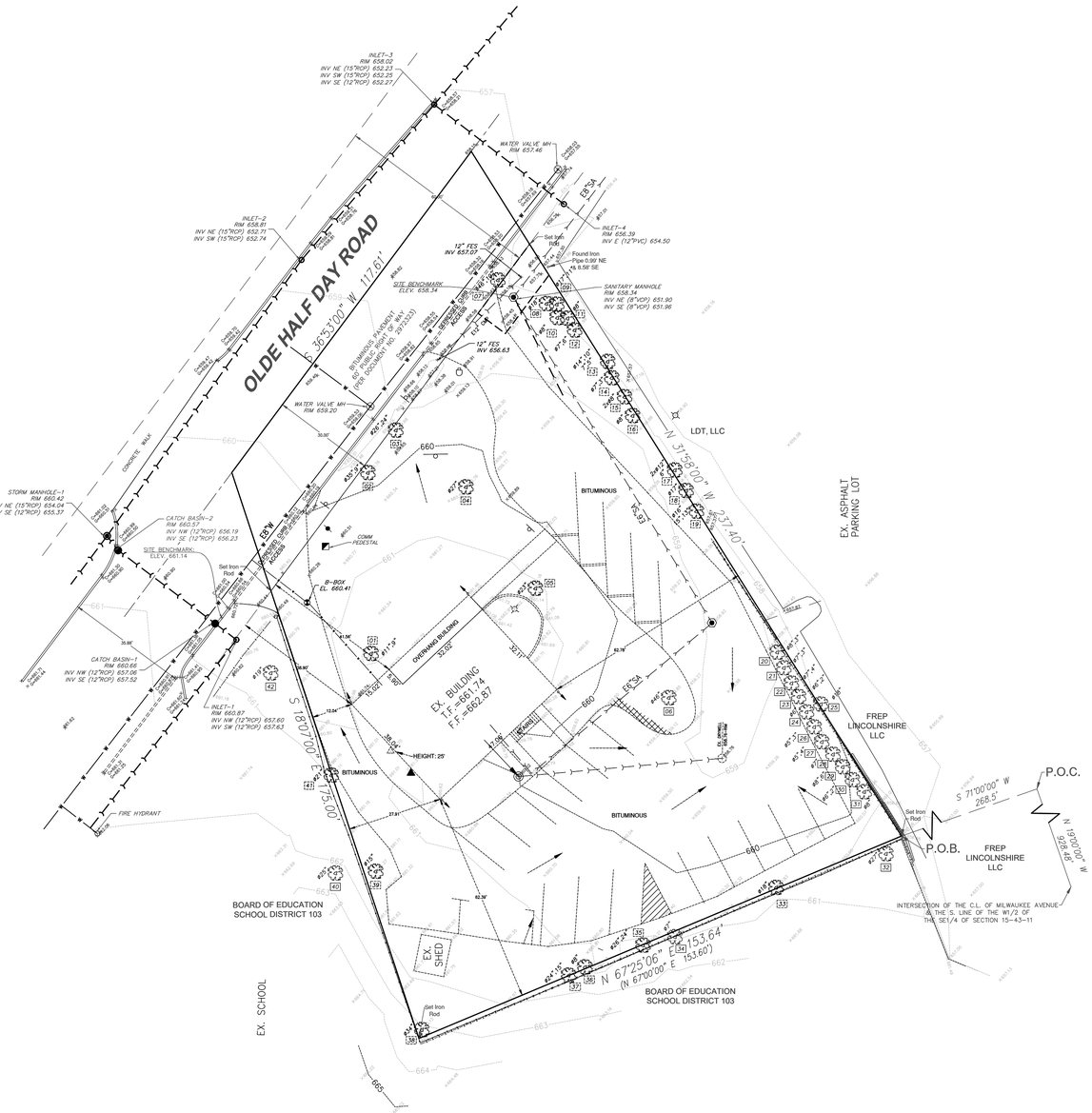

LOCATION MAP

NOT TO SCALE

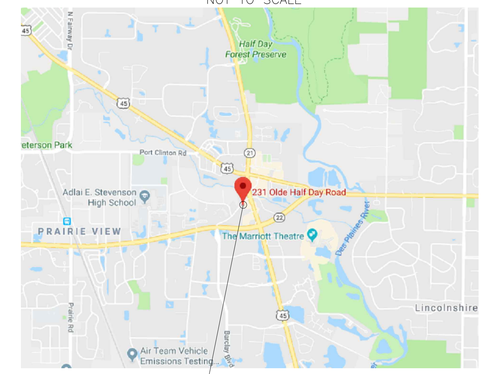

SITE

SURVEY BY:
GREENGARD, INC.
111 Barclay Blvd # 310, Lincolnshire, IL 60069
PHONE: (847) 634-3883
ILL. REGISTRATION NO. 184-000995

ADDITIONAL SURVEY BY:
Bono Consulting INC.

SITE BENCHMARK IS THE RIM OF THE SANITARY MANHOLE AT THE NORTHEAST CORNER OF THE PROPERTY.ELEVATION = 658.34

REFERENCE BENCHMARK IS BM 4-45A AT THE INTERSECTION OF HALF DAY RD. AND MILWAUKEE AVE., ELEV. 658.54.(NVAD 88)

NOTE :
EXISTING CONDITIONS ARE BASED UPON A TOPOGRAPHIC SURVEY. THIS IS NOT A BOUNDARY SURVEY. PROPERTY LINES SHOWN ARE FOR INFORMATIONAL PURPOSES ONLY AND SHALL NOT BE USED AS A BASIS FOR CONSTRUCTION LAYOUT. PROPERTY LINE INFORMATION SHOWN IS BASED ON THE PLAT OF SURVEY RECEIVED FROM THE OWNER AND ANY IRON PIPES (AS INDICATED) FOUND BY BCI'S SURVEY CREW.

PROPERTY BOUNDARY INFORMATION SHOWN HEREON IS TAKEN FROM OFFICIAL PLATS AND RECORDS

LOCATION OF UNDERGROUND UTILITIES WHERE NOT SUBSTANTIATED BY PHYSICAL EVIDENCE ARE TAKEN FROM RECORDS NORMALLY CONSIDERED RELIABLE. NO RESPONSIBILITY FOR THEIR ACCURACY IS ASSUMED BY THE SURVEYOR.

FOR LOCATION OF BURIED CABLE CALL J.U.L.I.E. @ 1-800-892-0123 BEFORE DIGGING

LOCATIONS OF EXISTING UTILITY SERVICES ARE BASED ON VISUAL OBSERVATIONS. CONTRACTOR MUST CONFIRM LOCATION AND CONDITION OF ALL UTILITY SERVICES TO REMAIN.

I HEREBY CERTIFY THAT THIS PLAN WAS PREPARED BY ME OR UNDER MY DIRECT PERSONAL SUPERVISION AND THAT I AM A DULY LICENSED PROFESSIONAL ENGINEER UNDER THE LAWS OF THE STATE OF ILLINOIS.

SIGNATURE — DATE: 8/13/2019

MY LICENSE EXPIRES ON NOVEMBER 30, 2019

INDEX TO SHEETS

NO.	DESCRIPTION
C-0.0	TOPOGRAPHIC SURVEY
C-0.1	DEMOLITION AND TREE REMOVAL PLAN
C-1.0	GEOMETRIC PLAN
C-2.0	GRADING AND EROSION CONTROL PLAN
C-3.0	UTILITY PLAN
C-4.0	DETAILS

LEGEND

630	EXISTING CONTOUR
630	PROPOSED CONTOUR
x690.60	EXISTING ELEVATION
690.65	PROPOSED ELEVATION
SAN	EXISTING SANITARY
	COMBINATION SEWER
SAN	PROPOSED SANITARY SEWER
	PROPOSED COMBINATION SEWER
STM	EXISTING STORM SEWER
STM	PROPOSED STORM SEWER
W	EXISTING WATERMAIN
W	PROPOSED WATERMAIN
GAS	EXISTING GAS LINE
CO/MED	EXISTING UNDERGROUND ELECTRIC
ATT	EXISTING UNDERGROUND TELEPHONE
CABLE	EXISTING UNDERGROUND CABLE
25"	EXISTING TREE
25"	REMOVE TREE
	TEMPORARY TREE FENCE
CF/SF	TEMPORARY SILT / CONSTRUCTION FENCE
S	SUMP PUMP [PROPOSED/EXISTING]
DS DSO	DOWNSPOUT (IN-GROUND) [PROPOSED]
	SWALE [PROPOSED]
	OUTLET / POP-UP EMITTER
	CATCH BASIN
	STORM MANHOLE
	SANITARY MANHOLE
	CLEANOUT
	B BOX
	WOOD UTILITY POLE
	LIGHT POLE
	FLARED END SECTION (F.E.S.)
	INLET / DRAIN
	WATER VALVE VAULT / WATER METER
	SIGN
	MANHOLE (UNCLASSIFIED)
	FIRE HYDRANT
10	TREE TAG NO.
	STOP LIGHT
	GAS VALVE
	ROOT PRUNE
T/Gxxxx	TOP OF GARAGE SLAB
T/Fxxxx	TOP OF FOUNDATION
F/Fxxxx	FINISH FLOOR
T/Wxxxx	TOP OF WALL

EXISTING TOPOGRAPHY
SCALE 1"=20'

0 10' 20' 50'

Sara E.F. Gensburg, Ltd.
Architecture/Design
105 Revere Drive, Suite G
Northbrook, IL 60062
Fax: (847) 715-9581
Phone: (847) 715-9591

BCI
BONO CONSULTING, INC.
CIVIL ENGINEERS
1016 BUSSE HIGHWAY PH.: (847) 823-3390
PARK RIDGE, IL 60068 FAX: (847) 823-3393
bbono@bonoconsulting.com

MEDICAL OFFICE BUILDING
231 OLDE HALF DAY ROAD
LINCOLNSHIRE, ILLINOIS

No.	Date:	Issued:
–	03-12-19	Issued for Preliminary Evaluation
–	04-08-19	DRT Progress Set
1	06-25-19	Revised per Village Comments
2	07-10-19	Revised per LCSMC
3	08-13-19	Revised per village comments

SEFG No. 118320
Drawn: MW
Checked: RW
Date: 04-05-19

SHEET: **C-0**

Sheet 1 of 7

Document 1

REMOVE BUILDING
REMOVE WALK
REMOVE PAVEMENT
REMOVE LINEAR ITEM
REMOVE ITEM

DEMOLITION PLAN
SCALE 1"=20'

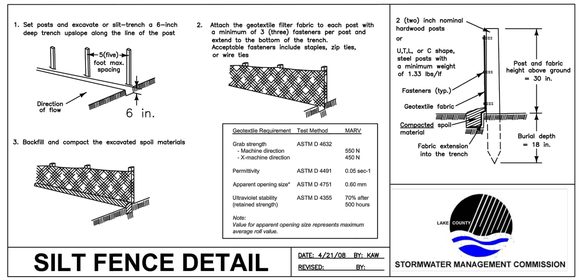

Geotextile Requirement	Test Method	MARV
Grab strength - Machine direction - X-machine direction	ASTM D 4632	550 N 450 N
Permittivity	ASTM D 4491	0.05 sec-1
Apparent opening size*	ASTM D 4751	0.60 mm
Ultraviolet stability (retained strength)	ASTM D 4355	70% after 500 hours

Note:
*Value for apparent opening size represents maximum average roll value.

SILT FENCE DETAIL

DATE: 4/21/08 BY: KAW
REVISED: BY:

STORMWATER MANAGEMENT COMMISSION

DEMOLITION NOTES

1. Contractor shall remove the existing building, pavement and utilities as shown.
2. All trenches created by removing utilities shall be backfilled with trench backfill.
3. Contractor to remove trees as shown. If any other trees are to be removed due to conflict with proposed improvements, contractor MUST contact Bono Consulting for approval.
4. All demolition debris shall be properly disposed of.
5. The contractor shall provide dust control fencing with fabric mesh.

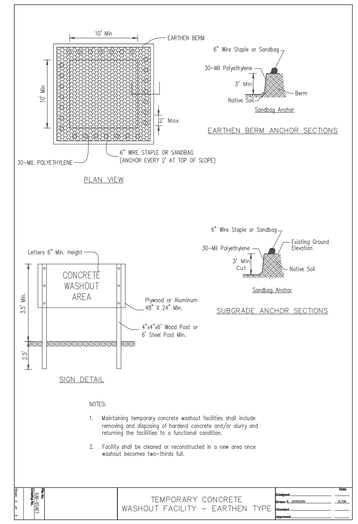

Tag	Common Name	Scientific Name	Size	Cond.	Form	Notes	No action	Remove
1	Alder	*Alnus glutinosa*	9,11	2	3			X
2	Catalpa	*Catalpa speciosa*	35,9	5	5	Trunk decay, leaning.		X
3	Catalpa	*Catalpa speciosa*	26,24	5	4	Trunk decay, pruned for utilities.		X
4	Honeylocust	*Gleditsia triacanthos*	27	2	3	Included bark.		X
5	Honeylocust	*Gleditsia triacanthos*	23	2	2			X
6	Silver Maple	*Acer saccharinum*	46	2	4	Girdling roots, included bark.	X	
7	Catalpa	*Catalpa speciosa*	46,10	5	5	Trunk decay.		X
8	Black Walnut	*Juglans nigra*	18	2	3			X
9	American Elm	*Ulmus americana*	17,11	2	4	Overtopped.		X
10	Boxelder	*Acer negundo*	8	4	4	Dieback, leaning.		X
11	Boxelder	*Acer negundo*	8	4	4	Dieback, leaning.		X
12	Boxelder	*Acer negundo*	7,6	4	4	Dieback, leaning.		X
13	Boxelder	*Acer negundo*	14,10,7,5	4	4	Dieback.		X
14	Mulberry	*Morus alba*	7,3	5	5	Very weak.		X
15	Boxelder	*Acer negundo*	8,8	5	5	Half dead.		X
16	Siberian Elm	*Ulmus pumila*	8	4	5	No top.		X
17	Boxelder	*Acer negundo*	12,12,6	5	5	Half dead.		X
18	American Elm	*Ulmus americana*	17	4	4	Dieback, trunk scars.		X
19	Silver Maple	*Acer saccharinum*	16,15,13	5	5	Basal, trunk decay.		X
20	Arborvitae	*Thuja occidentalis*	8,3	2	3		X	
21	Arborvitae	*Thuja occidentalis*	7,3	2	3		X	
22	Arborvitae	*Thuja occidentalis*	7,4	2	3		X	
23	Arborvitae	*Thuja occidentalis*	6,2	2	3		X	
24	Arborvitae	*Thuja occidentalis*	6	2	4		X	
25	Siberian Elm	*Ulmus pumila*	18	2	3		X	
26	Arborvitae	*Thuja occidentalis*	5,3	2	3		X	
27	Arborvitae	*Thuja occidentalis*	5,4	2	3		X	
28	Arborvitae	*Thuja occidentalis*	7	2	3		X	
29	Arborvitae	*Thuja occidentalis*	8,6	2	2		X	
30	Arborvitae	*Thuja occidentalis*	6,2	2	3		X	
31	Arborvitae	*Thuja occidentalis*	8	2	2		X	
32	Norway Maple	*Acer platanoides*	27	2	3	Included bark.	X	
33	Boxelder	*Acer negundo*	18	4	4	Dieback, metal in trunk.		X
34	Boxelder	*Acer negundo*	7	5	5	Half dead, overtopped.	X	
35	Boxelder	*Acer negundo*	26,24	5	5	Decay, dieback.		X
36	Mulberry	*Morus alba*	8	4	5	No top.		X
37	Mulberry	*Morus alba*	24,15	4	4	Decay, dieback.		X
38	Mulberry	*Morus alba*	34	5	4	Trunk decay.		X
39	Green Ash	*Fraxinus pennsylvanica*	15	5	5	Nearly dead.		X
40	Honeylocust	*Gleditsia triacanthos*	25	3	2	Dieback.	X	
41	Mulberry	*Morus alba*	21	4	3	Decay, dieback.		X
42	Colorado Spruce	*Picea pungens*	19	3	4		X	

Tree Condition. A visual assessment and rating of the overall health and vigor of the tree, as follows:

1 – Excellent
2 - Very Good
3 – Good
4 – Below Average
5 - Poor
6 - Dead

Prepared by: David Coulter, Osage Inc.
ISA Certifed Arborist #IL-0094 (Exp. 12/31/19)

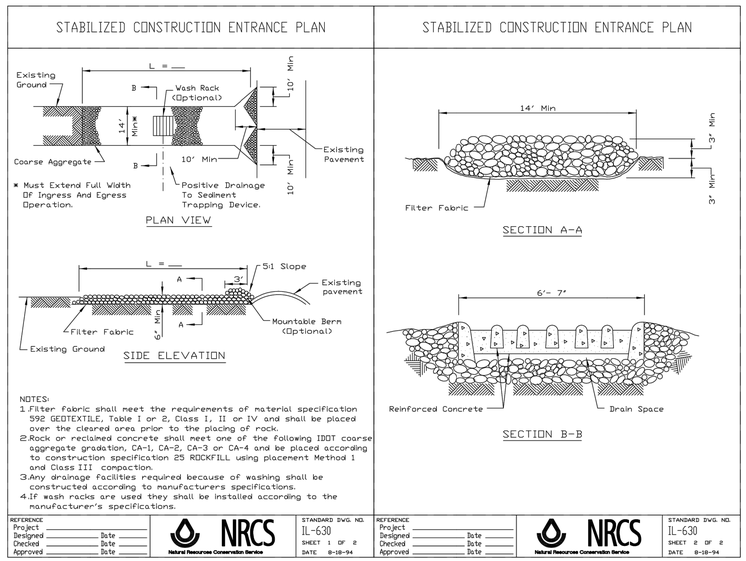

0 10' 20' 50'

Sara E.F. Gensburg, Ltd.
Architecture/Design
105 Revere Drive, Suite G
Northbrook, IL 60062
Fax: (847) 715-9581
Phone: (847) 715-9591

BCI
BONO CONSULTING, INC.
CIVIL ENGINEERS
1016 BUSSE HIGHWAY PH.: (847) 823-3300
PARK RIDGE, IL 60068 FAX: (847) 823-3303
bbono@bonoconsulting.com

MEDICAL OFFICE BUILDING
231 OLDE HALF DAY ROAD
LINCOLNSHIRE, ILLINOIS

No.	Date:	Issued:
1	03-12-19	Issued for Preliminary Evaluation
1	04-08-19	DRT Progress Set
1	06-25-19	Revised per Village Comments
2	07-10-19	Revised per LCSMC
3	08-13-19	Revised per village comments

SEFG No. 118320
Drawn: MW
Checked: RW
Date: 04-05-19

SHEET: C-0.1

Sheet 2 of 7

Document 1

	PAVEMENT LEGEND
	STANDARD DUTY PARKING LOT PAVEMENT 1 1/2" BITUMINOUS SURFACE COURSE, SUPERPAVE, MIX D, N50 3 1/2" BITUMINOUS BINDER COURSE, SUPERPAVE, IL-19, N50 10" AGGREGATE BASE COURSE CA-6, TYPE B
	IDOT STANDARD B-6.12 CURB AND GUTTER
	SIDEWALKS 4" PORTLAND CEMENT CONCRETE 2" COMPACTED AGGREGATE BASE COURSE CA-6
	APRONS, DRIVEWAY & TRASH ENCLOSURE 8" PORTLAND CEMENT CONCRETE 4" COMPACTED AGGREGATE BASE COURSE CA-6
	PERMEABLE PAVER
	LANDSCAPE AREA

SITE DATA:

TOTAL AREA = 22,753 sf = 0.52 ac

BUILDING AREA = 4,883 sf
PAVEMENT AREA = 11,865 sf
SIDEWALK AREA = 1,141 sf
LANDSCAPE AREA = 4,864 sf

IMPERVIOUS AREA:

TOTAL IMPERVIOUS AREA = 17,889 sf = 0.41 ac (79%)

PARKING:

28 - 19'x9' PARKING SPACES
2 - 19'x16' ADA PARKING SPACE

STORMWATER MANAGEMENT

STORMWATER MANAGEMENT NOT REQUIRED

SPECIAL MANAGEMENT AREAS:

THERE IS NO FLOODPLAIN OR WETLANDS WITHIN 100 FT OF THE SITE

PARKING RESTRICTIONS AROUND FIRE HYDRANTS, FIRE DEPARTMENT CONNECTION:
NO PARKING ALLOWED WITHIN 15' EITHER SIDE OF THE FIRE HYDRANT/FIRE DEPARTMENT CONNECTION ALONG THE CURB.

FIRE TRUCKS CAN PARK AT WEST AND SOUTH SIDE OF THE BUILDING AND BACK OUT TO OLDE HALF DAY ROAD.

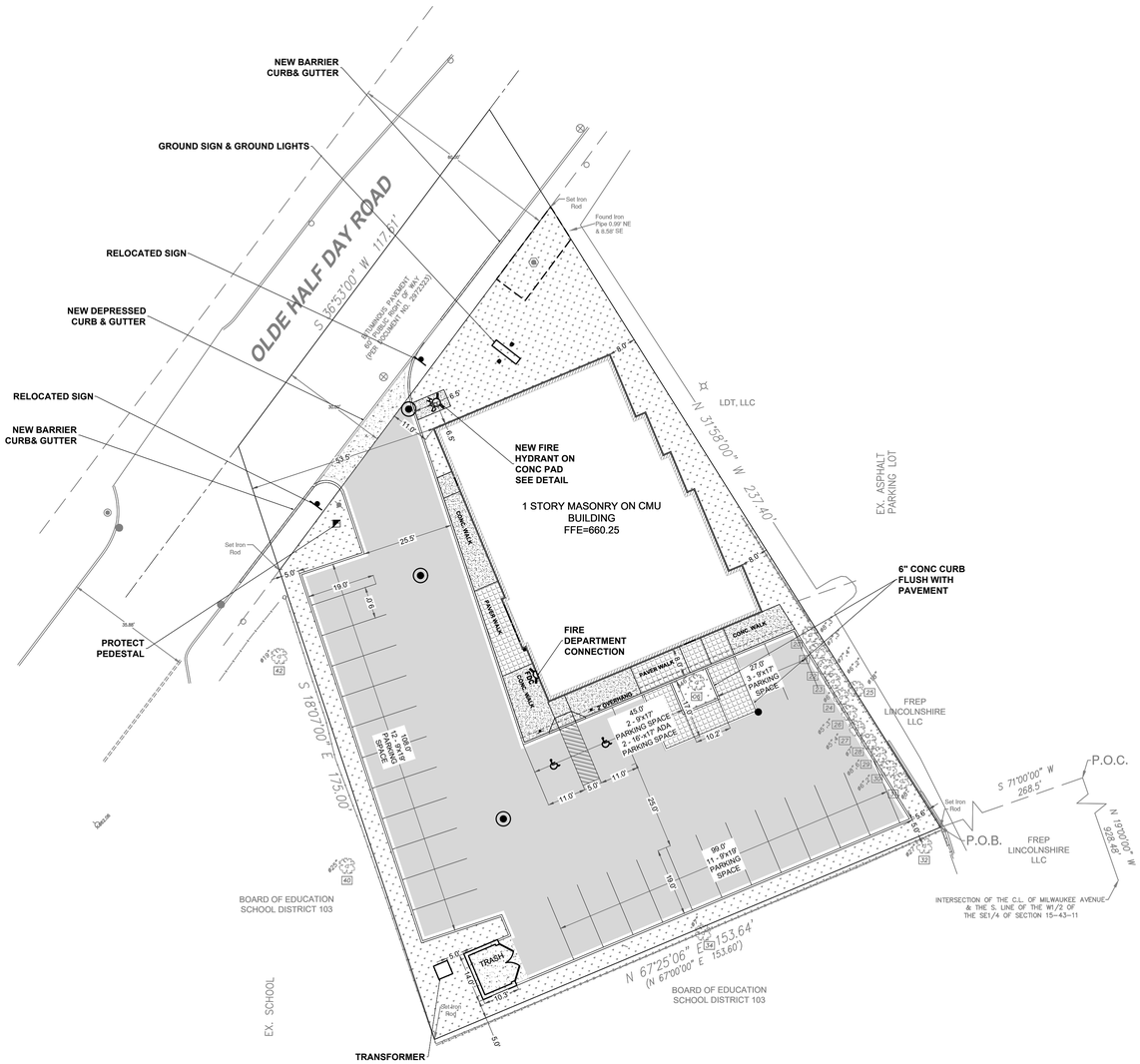

CONCRETE AND ASPHALT NOTES:

1. Concrete shall be placed in accordance with IDOT Standard Specifications Section 420. Concrete surfaces must be warrenteed for one year against any birdbathing, ponding or cracks over 1/4 wide.
2. All concrete shall be minimum 3,500 psi.
3. Clean, full depth sawcuts through existing sidewalk and curb scheduled for removal.
4. Combination curb & gutter is 6" high unless otherwise noted.
5. A 3/4" fiber expansion joint shall be installed when the new sidewalk or curb abuts any building.
6. Contraction joints should be sawcut a minimum of two inches deep within 4-12 hours of concrete placement, but no later than 24 hours after concrete placement, be in accordance with Section 420.05 IDOT Standard Specifications.
7. Maximum 50' c-c between contraction joints in curbs or sidewalk.
8. Asphalt shall be placed in accordance with IDOT Standard Specification Section 406. Asphalt surfaces must be warranteed for one year against birdbathing/ponding of ¼" standing water for areas greater than 25 square feet.
9. All parking lots to be proof rolled prior to placement of aggregate subbase and again prior to initial asphalt lift. Proof roll to be done with loaded double axle dump truck and witnessed by an owner's representative.
10. The sidewalk thickness across the driveway shall be a minimum of 8" PCC on 4" aggregate subbase.

PAVEMENT STRIPING NOTES

1. Marking paint shall be High Quality Traffic paint intended for striping asphalt parking lots.
   Color: Yellow
   Width: 4"
   Coverage Rate: 450 feet per gallon per IDOT Article 780.

GEOMETRIC PLAN
SCALE 1"=20'

0 10' 20' 50'

Sara E.F. Gensburg, Ltd.
Architecture/Design
105 Revere Drive, Suite G
Northbrook, IL 60062
Fax: (847) 715-9581
Phone: (847) 715-9591

BCI
BONO CONSULTING, INC.
CIVIL ENGINEERS
1016 BUSSE HIGHWAY PH.: (847) 823-3300
PARK RIDGE, IL 60068 FAX: (847) 823-3303
bbono@bonoconsulting.com

MEDICAL OFFICE BUILDING
231 OLDE HALF DAY ROAD
LINCOLNSHIRE, ILLINOIS

No.	Date:	Issued:
–	03-12-19	Issued for Preliminary Evaluation
–	04-08-19	DRT Progress Set
1	06-25-19	Revised per Village Comments
2	07-10-19	Revised per LCSMC
3	08-13-19	Revised per village comments

SEFG No. 118320
Drawn: MW
Checked: RW
Date: 04-05-19

SHEET: C-1

Sheet 3 of 7

Document 1

EARTHWORK NOTES:

1. All existing foundations, pavement, aggregate base, soil surfaces, excavated soil and vegetation shall be removed and disposed properly off site.
2. Remove soft or otherwise unstable subgrade materials.
3. Embankment shall be placed in accordance with Section 205 of the "Standard Specifications for Road and Bridge Construction." All embankments located within structural fill areas shall be constructed to a minimum 95% of the modified proctor density (ASTM D1557). Embankments located in non-structural fill areas shall be constructed to a minimum of 90% of the modified proctor density (ASTM D1557).
4. Subbase shall be adequately compacted and proof rolled with a loaded semitrailer prior to placing aggregate base. Any soft areas shall be removed and replaced with aggregate base.
5. Fill and subgrade to be compacted to 95% standard proctor density.
6. All earthwork shall be done in accordance with the state of Illinois, "Standard Specifications for Road and Bridge Construction," latest edition and "Supplemental Specifications and Recurring Special Provisions," latest edition. Included in this work, but not necessarily limited to the following are: clearing, stripping and stockpiling of topsoil, mass grading and fine grading of the site and roadways, excavation of unsuitable materials and excavation of detention ponds, landscape mound construction, and miscellaneous topsoil respread and seeding.
7. All grading operations are to be supervised and inspected by the owner's engineer or their representative. All testing, inspection, and supervision of soil quality, unsuitable soil removal and its replacement, and other soils related operations shall be entirely the responsibility of the soils engineer. No undercut shall be performed or claims for extra work without authorization by the owner and documentation by the soils engineer.
8. After stripping and excavating to the proposed subgrade level, as required, the building and parking areas should be proof-rolled with a loaded, tandem-axle dump truck or similar rubber tired vehicle, loaded with at least 9 tons per axle. Proof-rolling aids in providing a firm base for compaction of fills, and help to delineate soft, loose, or disturbed areas that may exist below subgrade level. Proof-rolling is especially important to help evaluate the surface stability of existing fill soils that may be left in place below floor slabs and pavements. Soils which are observed to rut or deflect excessively (more than 1 inch) under the moving load should either be scarified and re-compacted with a smooth drum vibratory roller for granular soils, a sheeps foot roller for cohesive soils, or undercut and replaced with properly compacted and documented structural fill. The proof-rolling and undercutting activities should be observed and documented by a representative of the geotechnical engineer and should be performed during a period of dry weather. In addition to proof-rolling, the subgrade soils should be scarified and compacted to at least 90 percent of the Modified Proctor maximum dry density ASTM D 698 for a depth of at least 8 inches below the surface.
9. Where encountered, loose sands should be re-compacted with a vibratory roller. Clay subgrade soils can be easily disturbed by construction activities and are sensitive to moisture. Therefore, extra care should be used to avoid disturbing these soils during construction activities. If the soils become unstable during construction, or if near surface soft subgrade soils are encountered, it is recommended that coarse aggregate be placed on the subgrade until a stable base for compaction of fill is achieved. Typically, 12 to 24 inches of course aggregate are required, depending in the consistency of the subgrade. the course aggregate should consists of clean, crushed stone gravel between 1/4 and 3 inches in size. The course aggregate should be spread in a max. of 12-inch layers and consolidated with compaction equipment until it is "locked" in place.
10. It shall be the responsibility of the contractor to remove from the site any and all materials and debris which results from their construction operations at no additional expense to the owner.
11. When in the opinion of the soils engineer, unsuitable soil conditions are encountered within utility trenches which require the removal of unsuitable materials below the depth of the bedding specified, the contractor shall obtain approval by the owner and the owner's engineer prior to removing the unsuitable soils and replace the material with granular compacted bedding material as directed by the soils engineer and the Municipality. The depth of the removal and replacement shall be documented by the owner's engineer and witnessed by the contractor. This work, when approved by the owner and owner's engineer, will be measured and paid for at the contract unit price per cubic yard in place for unsuitable soil which price shall include the removal and off-site disposal of unsuitable soil, the additional bedding material, and all labor, materials and equipment required to perform the work as specified.
12. The contractor shall be responsible for hiring and scheduling a qualified testing firm for all soil testing. This shall be included in the cost of work.
13. Subgrade for pavement and sidewalks shall be finished to +/- 0.1 foot of design subgrade elevations by the earthwork contractor. Fine grading shall be the responsibility of the paving contractor.
14. Subbase shall be adequately compacted and proof rolled with a loaded semitrailer prior to placing aggregate base. Any soft areas shall be removed and replaced with aggregate base.
15. Gravel subgrade preparation shall be in accordance with Article 212 of IDOT standard specifications.
16. Aggregate base course under sidewalks, driveways, curbs, and pavement shall be type B in accordance with IDOT Article 351.
17. All landscaping and lawn areas shall have a minimum of 6" topsoil per IDOT Article 211.
18. Proposed elevations are top of sod (lawn areas), top of asphalt or top of concrete.
19. Finished dirt grade in lawn areas shall be 2" below top of sod.

SOIL EROSION AND SEDIMENTATION CONTROL NOTES:

1. Install row silt fence prior to any earth disturbing activities.
2. Contractor to install construction entrance.
3. Contractor to install inlet filters in existing and proposed structures.
4. Contractor to remove any mud tracked onto existing pavement every night.
5. A concrete washout should be provided on-site. Concrete cannot be washed out into the public right-of-way or storm sewer system.
6. All disturbed green space areas to receive minimum 6" topsoil and be temporary seeded upon achievement of final grade of that area.
7. All disturbed green space areas to be planted/landscaped per landscape plan. Minimum seeding IDOT Type 1 turfgrass seeding per IDOT specifications.

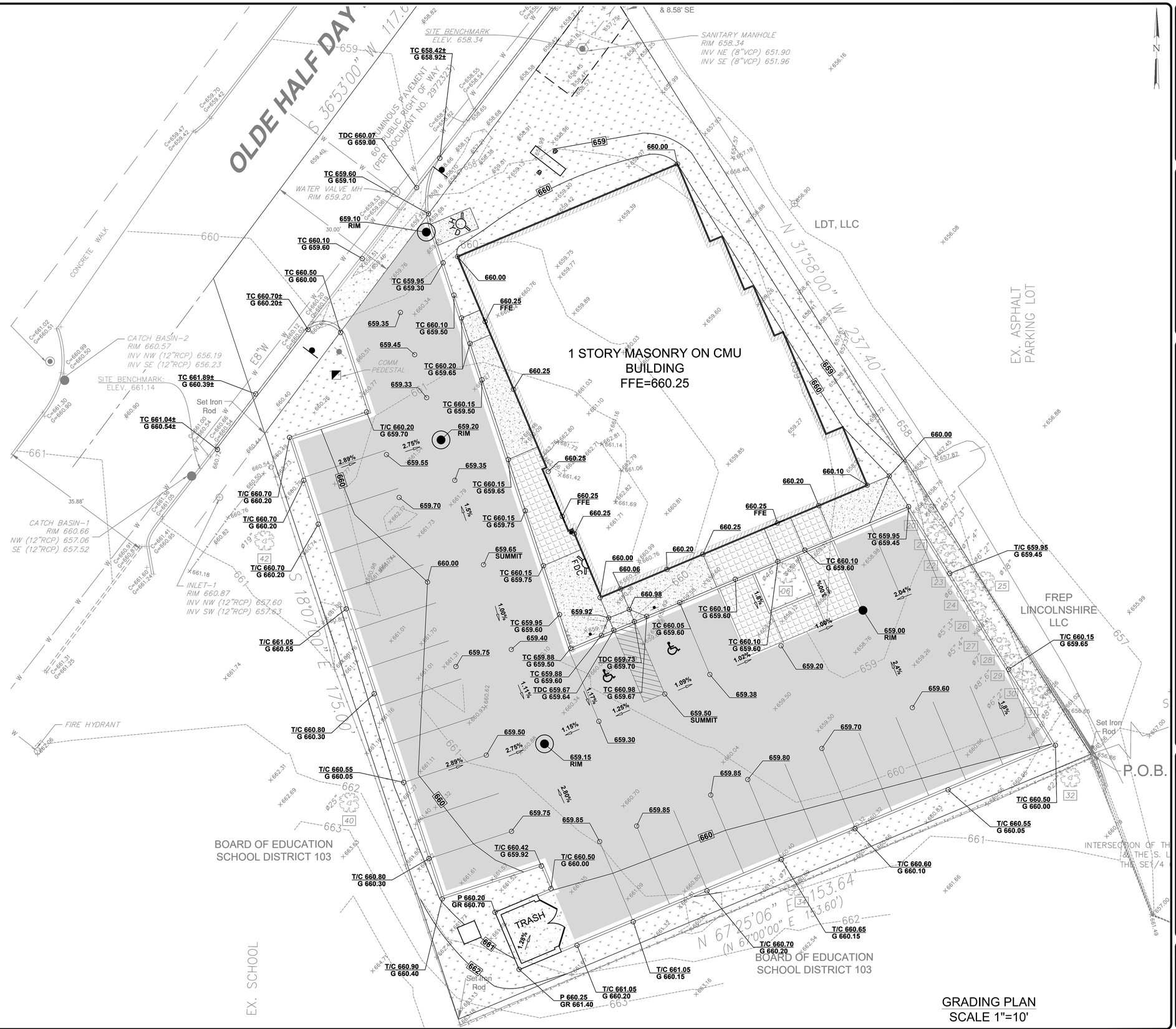

GRADING PLAN
SCALE 1"=10'

Sara E.F. Gensburg, Ltd.
Architecture/Design
105 Revere Drive, Suite G
Northbrook, IL 60062
Fax: (847) 715-9581
Phone: (847) 715-9591

BCI
BONO CONSULTING, INC.
CIVIL ENGINEERS
1016 BUSSE HIGHWAY PH. (847) 823-3390
PARK RIDGE, IL 60068 FAX. (847) 823-3303
bbono@bonoconsulting.com

MEDICAL OFFICE BUILDING
231 OLDE HALF DAY ROAD
LINCOLNSHIRE, ILLINOIS

No.	Date:	Issued:
-	03-12-19	Issued for Preliminary Evaluation
-	04-08-19	DRT Progress Set
1	06-25-19	Revised per Village Comments
2	07-10-19	Revised per LCSMC
3	08-13-19	Revised per village comments

SEFG No. 118320
Drawn: MW
Checked: RW
Date: 04-05-19
SHEET: C-2
Sheet 4 of 7

Document 1

UTILITY LEGEND

- EXISTING SANITARY SEWER
- PROPOSED SANITARY SEWER
- EXISTING STORM SEWER
- PROPOSED STORM SEWER
- EXISTING WATERMAIN
- PROPOSED WATERMAIN
- EXISTING GAS LINE
- EXISTING UNDERGROUND ELECTRIC
- EXISTING UNDERGROUND TELEPHONE
- EXISTING UNDERGROUND CABLE
- INLET
- STORM MANHOLE
- SANITARY MANHOLE
- CLEANOUT
- B BOX
- WATER VALVE VAULT / WATER METER
- SIGN
- FIRE HYDRANT

SANITARY SEWER NOTES:

1. FIELD VERIFY EXISTING SANITARY SEWER MANHOLE CONDITION, LOCATION, AND INVERT ELEVATION. THEN TELEVISE EXISTING SEWER SERVICE TO THE PUBLIC SEWER.
2. INSTALL NEW 6" SANITARY SEWER SERVICES AS SHOWN.
3. SEWER TO BE 6" PVC SDR 26 PER ASTM D-2241 AND PUSH ON JOINTS PER ASTM D-3139.
4. PROVIDE CA-7 TRENCH BACKFILL UNDER ALL PAVEMENT. SEE STANDARD DETAIL 390.10.
5. SANITARY MANHOLES TO BE PRE-CAST PER ASTM C478 WITH WATERTIGHT BOOT CONNECTIONS AND IDOT TYPE 1 FRAME AND LID WITH "SANITARY" CAST INTO LID.
6. FOLLOW ALL REQUIREMENTS OF THE VILLAGE OF LINCOLNSHIRE.

WATER NOTES:

1. FIELD VERIFY EXISTING WATER MAIN LOCATION PRIOR TO ANY WATER MAIN CONSTRUCTION
2. INSTALL NEW 6" DOMESTIC AND FIRE WATER SERVICE AS SHOWN.
3. WATER SERVICE TO BE 6" DUCTILE IRON, CLASS 52 PER ANSI/AWWA C151/A21.5 WITH CEMENT MORTAR LINING PER ANSI/AWWA C104/A21.4 AND PUSH ON JOINTS PER ANSI/AWWA C111/A21.11 AND POLYETHYLENE ENCASEMENT PER ANSI/AWWA C105/A21.5.
4. PROVIDE CA-7 TRENCH BACKFILL UNDER ALL PAVEMENT.
5. FOLLOW ALL REQUIREMENTS OF THE VILLAGE OF LINCOLNSHIRE.

ROOF DRAIN NOTES:

1. ROOF DRAINS TO BE PIPED TO THE CATCH BASIN AT THE SOUTH OF THE BUILDING WITH 6" HDPE, ADS N-12 PIPING. SEE ARCHITECTURE PLANS FOR ROOF DRAINS LOCATIONS.

STORM SEWER NOTES:

1. FIELD VERIFY EXISTING STORM SEWER INLET INVERT AND LOCATION PRIOR TO ANY SEWER CONSTRUCTION.
2. STORM SEWER TO BE RCP PER ASTM C 76 CLASS III WITH BITUMINOUS JOINTS PER ASTM C14 OR C76
3. PROVIDE CA-6 TRENCH BACKFILL UNDER ALL OTHER PAVEMENT.
4. STORM SEWER STRUCTURES TO BE PRE-CAST PER ASTM C478 WITH STEPS 16" ON CENTER PER ASTM C478-05
5. FOLLOW ALL REQUIREMENTS OF THE VILLAGE OF LINCOLNSHIRE.
6. INSTALL INLET BASKETS ON ALL OPEN STORM STRUCTURES.

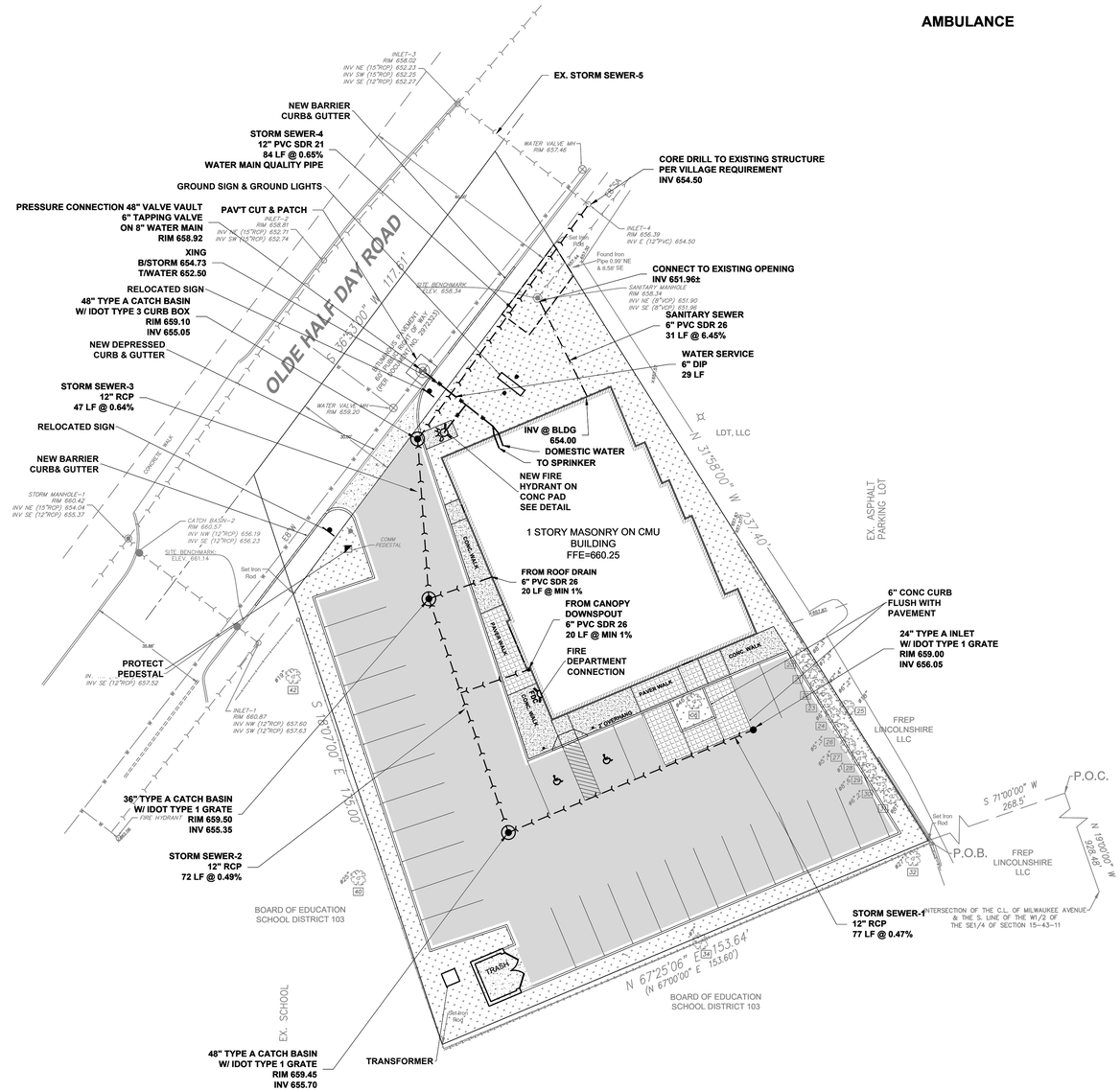

PIPE CAPACITY SHEET

Manning's Equations Q = (1.486 / n) * AR2/3 * S1/2

NE Illinois 10-yr, 5-min storm I = 6.48 in/hr

Pipe	C	I	A (ac)	Material	Q_{design}	Dia.	Slope	n	$AR^{2/3}$	$Q_{capacity}$	% full	Vel. ratio	Velocity
1	0.95	6.48	0.12	RCP	0.75	12	0.47	0.013	0.31	2.44	0.31	0.87	2.72
2	0.95	6.48	0.26	RCP	1.62	12	0.49	0.013	0.31	2.49	0.65	1.07	3.38
3	0.95	6.48	0.44	RCP	2.71	12	0.60	0.013	0.31	2.76	0.98	1.14	4.01
4	0.95	6.48	0.46	RCP	2.84	12	0.65	0.013	0.31	2.87	0.99	1.14	4.17
5	0.95	6.48	0.50	PVC	3.10	12	4.64	0.009	0.31	11.09	0.28	0.85	11.98

UTILITY PLAN
SCALE 1"=20'

0 10' 20' 50'

Sara E.F. Gensburg, Ltd.
Architecture/Design
105 Revere Drive, Suite G
Northbrook, IL 60062
Fax: (847) 715-9581
Phone: (847) 715-9591

BCI
BONO CONSULTING, INC.
CIVIL ENGINEERS
1016 BUSSE HIGHWAY PH.: (847) 823-3390
PARK RIDGE, IL 60068 FAX: (847) 823-3303
bbono@bonoconsulting.com

MEDICAL OFFICE BUILDING
231 OLDE HALF DAY ROAD
LINCOLNSHIRE, ILLINOIS

No.	Date:	Issued:
1	03-12-19	Issued for Preliminary Evaluation
1	04-08-19	DRT Progress Set
1	06-25-19	Revised per Village Comments
2	07-10-19	Revised per LCSMC
3	08-13-19	Revised per village comments

SEFG No. 118320
Drawn: MW
Checked: RW
Date: 04-05-19

SHEET: C-3

Sheet 5 of 7

Document 1

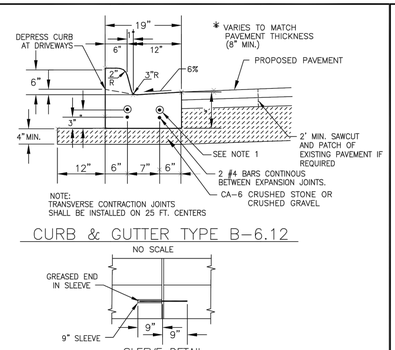

CURB & GUTTER TYPE B-6.12

NO SCALE

SLEEVE DETAIL

NO SCALE

NOTES:

1. EXPANSION JOINTS W/ 3/4" PREFORMED EXPANSION JOINT MATERIAL & TWO (2) #5 SMOOTH DOWEL BARS WITH GREASE CAPS SHALL BE PLACED:
   a. AT ENDS OF INTERSECTION RADII, P.C.'S, RADIUS POINTS, & BACK OF CUL-DE-SACS
   b. 5 FT. ON EACH SIDE OF DRAINAGE STRUCTURES
   c. MAX. OF 60 FT. INTERVALS
   d. WHERE NEW CURB MEETS EXISTING CURB, THE EXISTING CURB SHALL BE DRILLED AND TWO (2) #5 SMOOTH DOWEL BARS GROUTED IN PLACE W/ THE GREASE CAP PLACED ON THE SIDE OF THE NEW CURB & GUTTER.
2. TOOL OR SAWCUT CONTRACTION JOINTS AT 15 FT. INTERVALS.
3. SAWCUTS SHALL BE MADE WITHIN TWENTY-FOUR (24) HRS. AND SEALED W/ JOINT SEALANT, JOINTS SHALL BE CLEAN AND DRY PRIOR TO APPLICATION OF SEALANT.

Village of Lincolnshire | B-6.12 CURB AND GUTTER DETAIL | DESIGNED BY B&W | CHECKED BY | DATE NOV. 2018 | SCALE NONE | PROJECT NO. 180900 | SHEET NO. C-1

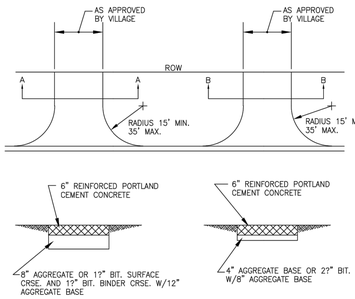

SECTION – A
HEAVY

SECTION – B
LIGHT

Village of Lincolnshire | DRIVEWAY DETAIL COMMERCIAL / INDUSTRIAL | DESIGNED BY B&W | CHECKED BY | DATE NOV. 2018 | SCALE NONE | PROJECT NO. 180900 | SHEET NO. D-2

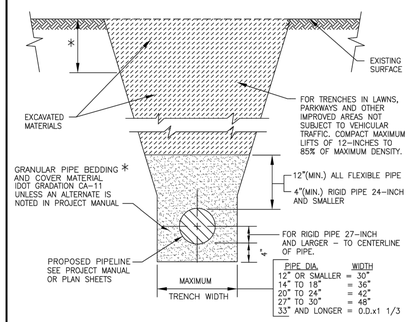

PIPE DIA.	WIDTH
12" OR SMALLER	= 30"
14" TO 18"	= 36"
20" TO 24"	= 42"
27" TO 30"	= 48"
33" AND LONGER	= O.D.x1 1/3

FOR NON-PAVED AREAS

* FOR FLEXIBLE THERMOPLASTIC OR HDPE PIPE COMPLY WITH ASTM 2321, CLASS I OR II.

FOR RIGID PIPE COMPLY WITH ASTM C12, BEDDING CLASS B.

Village of Lincolnshire | TYPICAL TRENCH DETAIL NON-PAVED AREAS | DESIGNED BY B&W | CHECKED BY | DATE NOV. 2018 | SCALE NONE | PROJECT NO. 180900 | SHEET NO. E-1

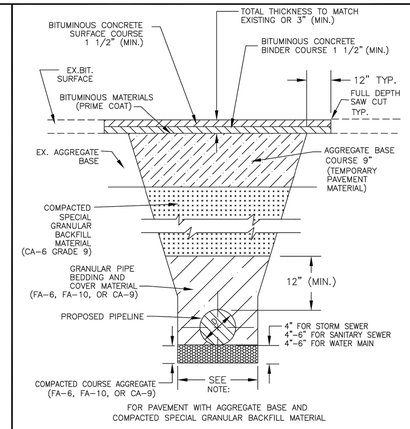

FOR PAVEMENT WITH AGGREGATE BASE AND COMPACTED SPECIAL GRANULAR BACKFILL MATERIAL

NOTE:

MINIMUM TRENCH WIDTH, D+18" FOR DEPTHS ≤ 5' WHEN SHEETING OR SHORING NOT REQUIRED.
D+3'-0" FOR DEPTHS ≥ 5', WHEN SHEETING OR SHORING NOT REQUIRED.

Village of Lincolnshire | TYPICAL TRENCH DETAIL PAVEMENT WITH AGGREGATE BASE | DESIGNED BY B&W | CHECKED BY | DATE NOV. 2018 | SCALE NONE | PROJECT NO. 180900 | SHEET NO. E-2

NOTES:

1. ECCENTRIC CONE REQUIRED
2. USE 4'-0" DIAMETER FOR WATER MAIN SIZES 4" THRU 8".
   USE 5'-0" DIAMETER FOR WATER MAIN SIZES 10" THRU 20".
   USE 6'-0" DIAMETER FOR WATER MAIN SIZES 20" OR GREATER.

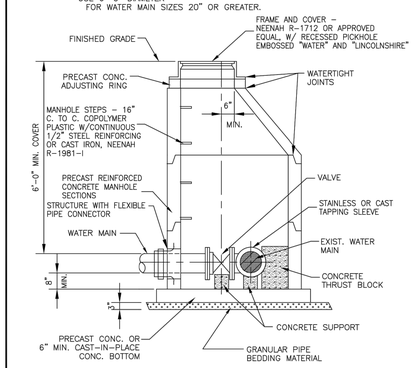

Village of Lincolnshire | PRESSURE CONNECTION VALVE VAULT DETAIL | DESIGNED BY B&W | CHECKED BY | DATE NOV. 2018 | SCALE NONE | PROJECT NO. 180900 | SHEET NO. F-3

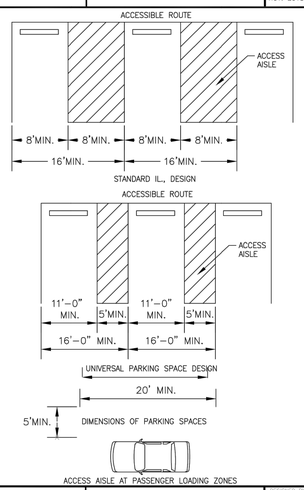

Village of Lincolnshire | PARKING SPACE DETAIL | DESIGNED BY B&W | CHECKED BY | DATE NOV. 2018 | SCALE NONE | PROJECT NO. 180900 | SHEET NO. J-1

NOTE:

THIS IS A STANDARD SIGN AND MAY BE ORDERED FROM ANY TRAFFIC SIGN SUPPLIER BY NUMBER. THE ARROW SHOULD BE OMITTED WHERE THERE IS ONLY ONE SPACE. THE ARROW MAY ALSO BE MADE TO POINT IN ONLY ONE DIRECTION. THE ARROW MAY ALSO BE REPLACED BY "TIME" SUCH AS 9 AM – 5 PM WHERE A PART TIME RESTRICTION EXISTS. THE SIGN MUST BE SUPPLEMENTED WITH THE ILLINOIS STANDARD R7-1101 PLATE GIVING THE AMOUNT OF THE FINE FOR ILLEGALLY PARKING IN THE RESERVED SPACE(S).

COLORS
LEGEND AND BORDER–PANTONE 340C
WHITE SYMBOL ON PANTONE 286 BACKGROUND
BACKGROUND–WHITE

Village of Lincolnshire | HANDICAPPED PARKING SIGN | DESIGNED BY B&W | CHECKED BY | DATE NOV. 2018 | SCALE NONE | PROJECT NO. 180900 | SHEET NO. J-2

ILLINOIS STANDARD
R7-1101

COLOR: LEGEND AND BORDER — GREEN NON-REFLECTORIZED (PANTONE 340C)

BACKGROUND — WHITE REFLECTORIZED

SIGN SIZE	DIMENSIONS							
	A	B	C	D	E	F	G	H
12 X 6	12.0	6.0	1.5	4.5	1.19	3.53	4.6	4.0

SIGN SIZE	SERIES LINES	MARGIN	BORDER	BLK. STD.
12 X 6	3A	0.37	0.37	B5-126

ALL DIMENSIONS IN INCHES TO BE USED WITH R7-8
$=SERIES 3A "S"

NOTE:

THIS PLATE MAY BE MOUNTED DIRECTLY BELOW THE R7-8 SIGN OR COMBINED WITH THAT SIGN ON A SINGLE 12-INCH BY 24-INCH PANEL.

Village of Lincolnshire | "100 FINE" SIGN DETAIL | DESIGNED BY B&W | CHECKED BY | DATE NOV. 2018 | SCALE NONE | PROJECT NO. 180900 | SHEET NO. J-3

NOTE:
METAL HYDRANT FLAG WITH REFLECTIVE TAPE REQUIRED

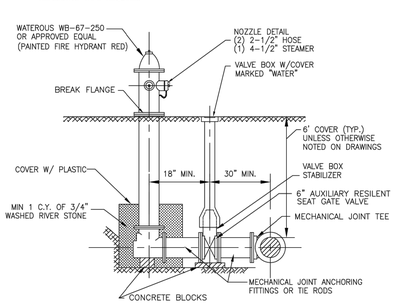

FIRE HYDRANT INSTALLATION DETAIL

NO SCALE

Village of Lincolnshire | FIRE HYDRANT INSTALLATION DETAIL | DESIGNED BY B&W | CHECKED BY | DATE NOV. 2018 | SCALE NONE | PROJECT NO. 180900 | SHEET NO. F-4

ER-9

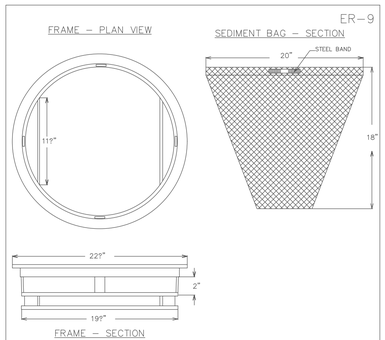

GENERAL NOTES:

FRAME: TOP FLANGE FABRICATED FROM 1/8"X1/8"X1/8" ANGLE. BASE RIM FABRICATED FROM 1/8"X1/2"X1/8" CHANNEL. HANDLES AND SUSPENSION BRACKETS FABRICATED FROM 1/8"X1/4" FLAT STOCK. ALL STEEL CONFORMING TO ASTM-A36.
SEDIMENT BAG: BAG FABRICATED FROM 4 OZ./ SQ.YD. NON-WOVEN POLYPROPYLENE GEOTEXTILE REINFORCED WITH POLYESTER MESH. BAG SECURED TO BASE RIM WITH A STAINLESS STEEL STRAP AND LOCK.
FILTER FOR OTHER SHAPE GRATES SHALL BE APPROVED IN ADVANCE OF PLACEMENT BY VILLAGE ENGINEERING.

NOT TO SCALE

REVISED: 01-01-19 | FILTER FOR ROUND OPEN (TYPE 1) GRATE & FRAME DETAIL

U-9

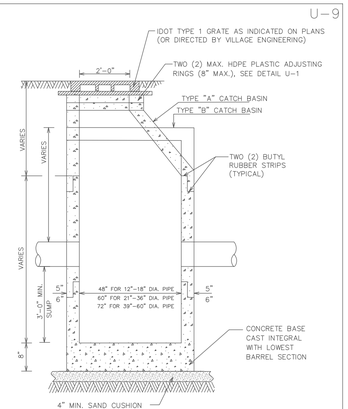

NOTES:

1. MANHOLES MUST CONFORM TO ASTM C-478.
2. MANHOLE SECTIONS TO BE TONGUE AND GROOVED.
3. NON-PRECAST OPENINGS SHALL BE CORED, RUBBER BOOTED AND INTERIOR MORTARED AROUND PIPE.*
4. USE ECCENTRIC CONE ONLY.

* SEE PIPE CONNECTION TO STRUCTURE DETAIL U-5 FOR NON-PRECAST OPENINGS.

NOT TO SCALE

REVISED: 01-01-19 | CATCH BASIN DETAIL

LAKE COUNTY STORMWATER MANAGEMENT COMMISSION
SOIL EROSION AND SEDIMENT CONTROL CONSTRUCTION NOTES

A. SEDIMENT CONTROL MEASURES SHALL BE INSTALLED PRIOR TO THE COMMENCEMENT OF HYDROLOGIC DISTURBANCE OF UPLAND AREAS.

B. FOR THOSE DEVELOPMENTS THAT REQUIRE A DESIGNATED EROSION CONTROL INSPECTOR (DECI), INSPECTIONS AND DOCUMENTATION SHALL BE PERFORMED, AT A MINIMUM:

- UPON COMPLETION OF SEDIMENT AND RUNOFF CONTROL MEASURES (INCLUDING PERIMETER CONTROLS AND DIVERSIONS), PRIOR TO PROCEEDING WITH ANY OTHER EARTH DISTURBANCE OR GRADING.
- AFTER EVERY SEVEN (7) CALENDAR DAYS OR STORM EVENT WITH GREATER THAN 0.5 INCH OF RAINFALL OR LIQUID EQUIVALENT PRECIPITATION.

C. SOIL DISTURBANCE SHALL BE CONDUCTED IN SUCH A MANNER AS TO MINIMIZE EROSION. IF STRIPPING, CLEARING, GRADING, OR LANDSCAPING ARE TO BE DONE IN PHASES, THE PERMITTEE SHALL PLAN FOR APPROPRIATE SOIL EROSION AND SEDIMENT CONTROL MEASURES.

D. A STABILIZED MAT OF CRUSHED STONE MEETING IDOT GRADATION CA-1 UNDERLAIN WITH FILTER FABRIC AND IN ACCORDANCE WITH THE ILLINOIS URBAN MANUAL, OR OTHER APPROPRIATE MEASURE(S) AS APPROVED BY THE ENFORCEMENT OFFICER, SHALL BE INSTALLED AT ANY POINT WHERE TRAFFIC WILL BE ENTERING OR LEAVING A CONSTRUCTION SITE. SEDIMENT OR SOIL REACHING AN IMPROVED PUBLIC RIGHT-OF-WAY, STREET, ALLEY OR PARKING AREA SHALL BE REMOVED BY SCRAPING OR STREET CLEANING AS ACCUMULATIONS WARRANT AND TRANSPORTED TO A CONTROLLED SEDIMENT DISPOSAL AREA.

E. TEMPORARY DIVERSIONS SHALL BE CONSTRUCTED AS NECESSARY TO DIRECT ALL RUNOFF FROM HYDROLOGICALLY DISTURBED AREAS TO AN APPROPRIATE SEDIMENT TRAP OR BASIN.

F. DISTURBED AREAS SHALL BE STABILIZED WITH TEMPORARY OR PERMANENT MEASURES WITHIN SEVEN (7) CALENDAR DAYS FOLLOWING THE END OF ACTIVE HYDROLOGIC DISTURBANCE OR REDISTURBANCE.

G. ALL STOCKPILES SHALL HAVE APPROPRIATE MEASURES TO PREVENT EROSION. STOCKPILES SHALL NOT BE PLACED IN FLOOD PRONE AREAS OR WETLANDS AND DESIGNATED BUFFERS.

H. SLOPES STEEPER THAN 3H:1V SHALL BE STABILIZED WITH APPROPRIATE MEASURESAS APPROVED BY THE ENFORCEMENT OFFICER.

I. APPROPRIATE EROSION CONTROL BLANKET SHALL BE INSTALLED ON ALL INTERIOR DETENTION BASIN SIDE SLOPES BETWEEN THE NORMAL WATER LEVEL AND HIGH WATER LEVEL.

J. STORM SEWERS THAT ARE OR WILL BE FUNCTIONING DURING CONSTRUCTION SHALL BE PROTECTED BY AN APPROPRIATE SEDIMENT CONTROL MEASURE.

K. IF DEWATERING SERVICES ARE USED, ADJOINING PROPERTIES AND DISCHARGE LOCATIONS SHALL BE PROTECTED FROM EROSION AND SEDIMENTATION. DISCHARGES SHALL BE ROUTED THROUGH AN APPROVED ANIONIC POLYMER DEWATERING SYSTEM OR A SIMILAR MEASURE AS APPROVED BY THE ENFORCEMENT OFFICER. DEWATERING SYSTEMS SHOULD BE INSPECTED DAILY DURING OPERATIONAL PERIODS. THE ENFORCEMENT OFFICER, OR APPROVED REPRESENTATIVE, MUST BE PRESENT AT THE COMMENCEMENT OF DEWATERING ACTIVITIES.

L. IF INSTALLED SOIL EROSION AND SEDIMENT CONTROL MEASURES DO NOT MINIMIZE SEDIMENT LEAVING THE DEVELOPMENT SITE, ADDITIONAL MEASURES SUCH AS ANIONIC POLYMERS OR FILTRATION SYSTEMS MAY BE REQUIRED BY THE ENFORCEMENT OFFICER.

M. ALL TEMPORARY AND PERMANENT EROSION CONTROL MEASURES MUST BE MAINTAINED AND REPAIRED AS NEEDED. THE PROPERTY OWNER SHALL BE ULTIMATELY RESPONSIBLE FOR MAINTENANCE AND REPAIR.

N. ALL TEMPORARY SEDIMENT CONTROL MEASURES SHALL BE REMOVED WITHIN 30 DAYS AFTER FINAL SITE STABILIZATION IS ACHIEVED OR AFTER THE TEMPORARY MEASURES ARE NO LONGER NEEDED.

O. THE EROSION CONTROL MEASURES INDICATED ON THE PLANS ARE THE MINIMUM REQUIREMENTS. ADDITIONAL MEASURES MAY BE REQUIRED, AS DIRECTED BY THE ENGINEER, ENFORCEMENT OFFICER, OR OTHER GOVERNING AGENCY.

U:\Regulatory Program\SESC handouts\SE-SC Notes 2013 TAC-approved.docx

LAKE COUNTY

STORMWATER MANAGEMENT COMMISSION

TYPICAL CONSTRUCTION SEQUENCING

1.) Installation of soil erosion and sediment control SE/SC measures
   a.) Selective vegetation removal for silt fence installation
   b.) Silt fence installation
   c.) Construction fencing around areas not to be disturbed
   d.) Stabilized construction entrance

2.) Tree removal where necessary (clear & grub)

3.) Construct sediment trapping devices (sediment traps, basins…)

4.) Construct detention facilities and outlet control structure with restrictor & temporary perforated riser

5.) Strip topsoil, stockpile topsoil and grade site

6.) Temporarily stabilize topsoil stockpiles (seed and silt fence around toe of slope)

7.) Install storm sewer, sanitary sewer, water and associated inlet & outlet protection

8.) Permanently stabilize detention basins with seed and erosion control blanket

9.) Temporarily stabilize all areas including lots that have reached temporary grade

10.) Install roadways

11.) Permanently stabilize all outlot areas

12.) Install structures and grade individual lots

13.) Permanently stabilize lots

14.) Remove all temporary SE/SC measures after the site is stabilized with vegetation

* Soil erosion and sediment control maintenance must occur every two weeks and after every ½ or greater rainfall event

U:\Regulatory Program\SESC handouts\TYPICAL CONSTRUCTION SEQUENCING.doc

Sara E.F. Gensburg, Ltd.
Architecture/Design
105 Revere Drive, Suite G
Northbrook, IL 60062
Fax: (847) 715-9581
Phone: (847) 715-9591

BCI
BONO CONSULTING, INC.
CIVIL ENGINEERS
1016 BUSSE HIGHWAY PH.: (847) 823-3300
PARK RIDGE, IL 60068 FAX: (847) 823-3303
bbonc@bonoconsulting.com

MEDICAL OFFICE BUILDING
231 OLDE HALF DAY ROAD
LINCOLNSHIRE, ILLINOIS

No.	Date:	Issued:
1	03-12-19	Issued for Preliminary Evaluation
1	04-08-19	DRT Progress Set
1	06-25-19	Revised per Village Comments
2	07-10-19	Revised per LCSMC
3	08-13-19	Revised per village comments

SEFG No. 118320
Drawn: MW
Checked: RW
Date: 04-05-19
SHEET: C-4
Sheet 6 of 7

Document 1

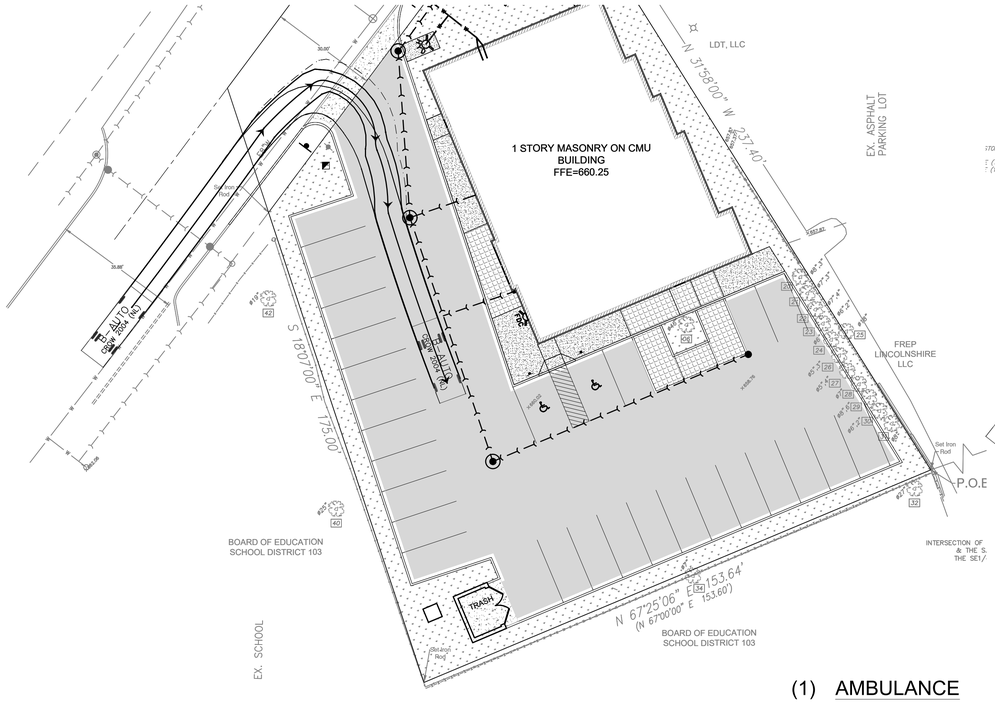

(1) AMBULANCE

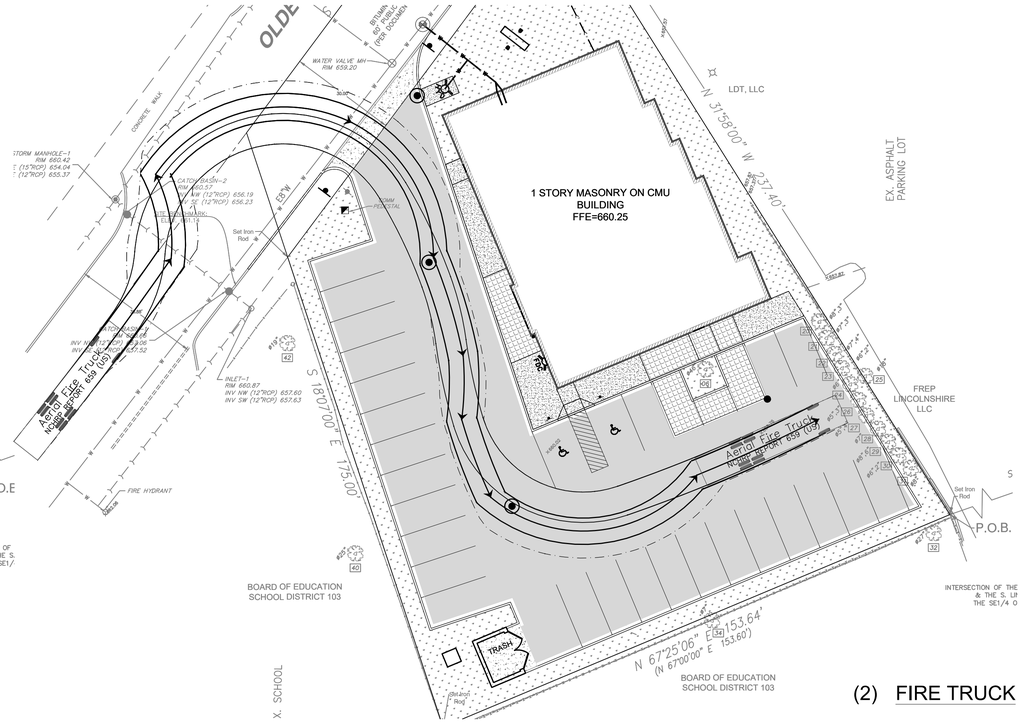

(2) FIRE TRUCK

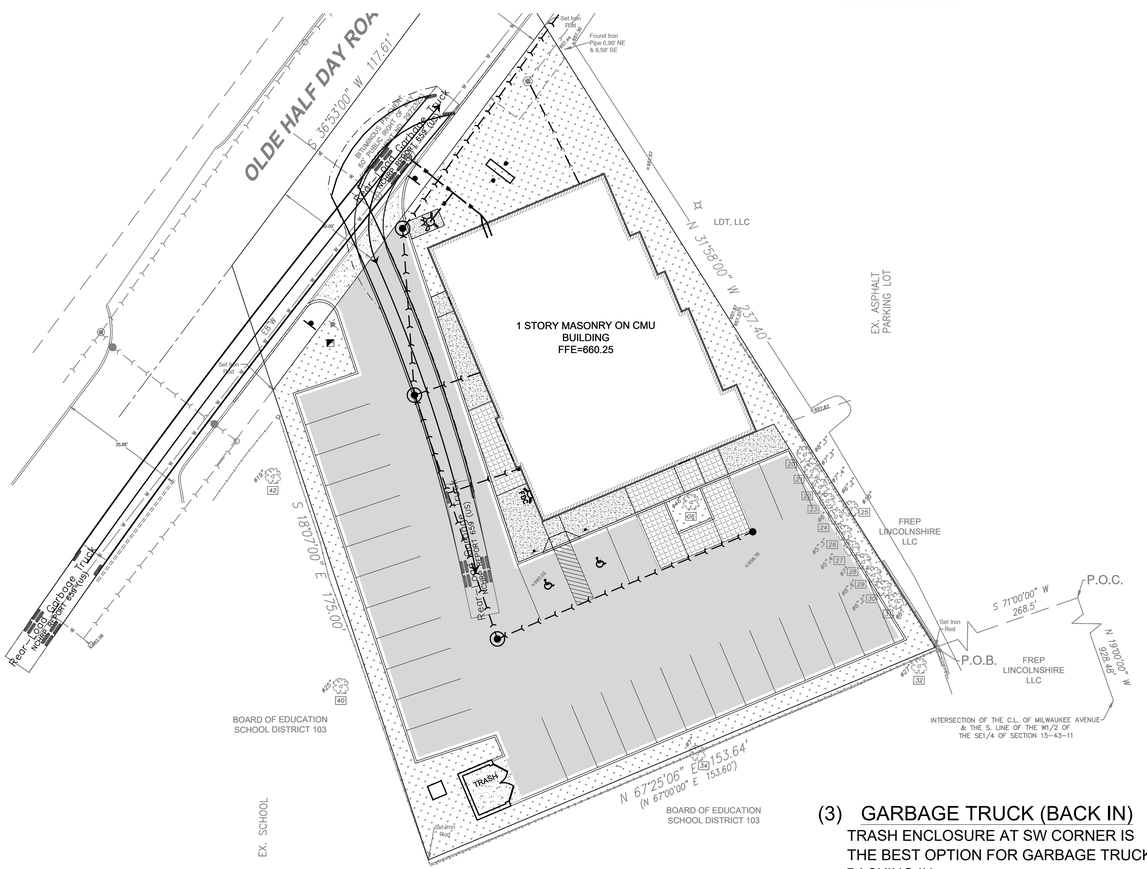

(3) GARBAGE TRUCK (BACK IN)
TRASH ENCLOSURE AT SW CORNER IS
THE BEST OPTION FOR GARBAGE TRUCK
BACKING IN

AUTOTURN EXHIBIT
SCALE 1"=20'

Sara E.F. Gensburg, Ltd.
Architecture/Design
105 Revere Drive, Suite G
Northbrook, IL 60062
Fax: (847) 715-9581
Phone: (847) 715-9591

BONO CONSULTING, INC.
CIVIL ENGINEERS
1016 BUSSE HIGHWAY PH.: (847) 823-3300
PARK RIDGE, IL 60068 FAX: (847) 823-3303
bbono@bonoconsulting.com

MEDICAL OFFICE BUILDING
231 OLDE HALF DAY ROAD
LINCOLNSHIRE, ILLINOIS

No.	Date:	Issued:
–	03-12-19	Issued for Preliminary Evaluation
–	04-08-19	DRT Progress Set
1	06-25-19	Revised per Village Comments
2	07-10-19	Revised per LCSMC
3	08-13-19	Revised per village comments

SEFG No. 118320
Drawn: MW
Checked: RW
Date: 04-05-19

SHEET: **EX-1**

Sheet 7 of 7

Document 1

LEGEND

- PROPOSED SHADE TREE
- PROPOSED EVERGREEN TREE
- PROPOSED LARGE SHRUB
- PROPOSED EVERGREEN SHRUB
- PROPOSED DECIDUOUS SHRUB
- PROPOSED PERENNIAL
- PROPOSED GROUND COVER

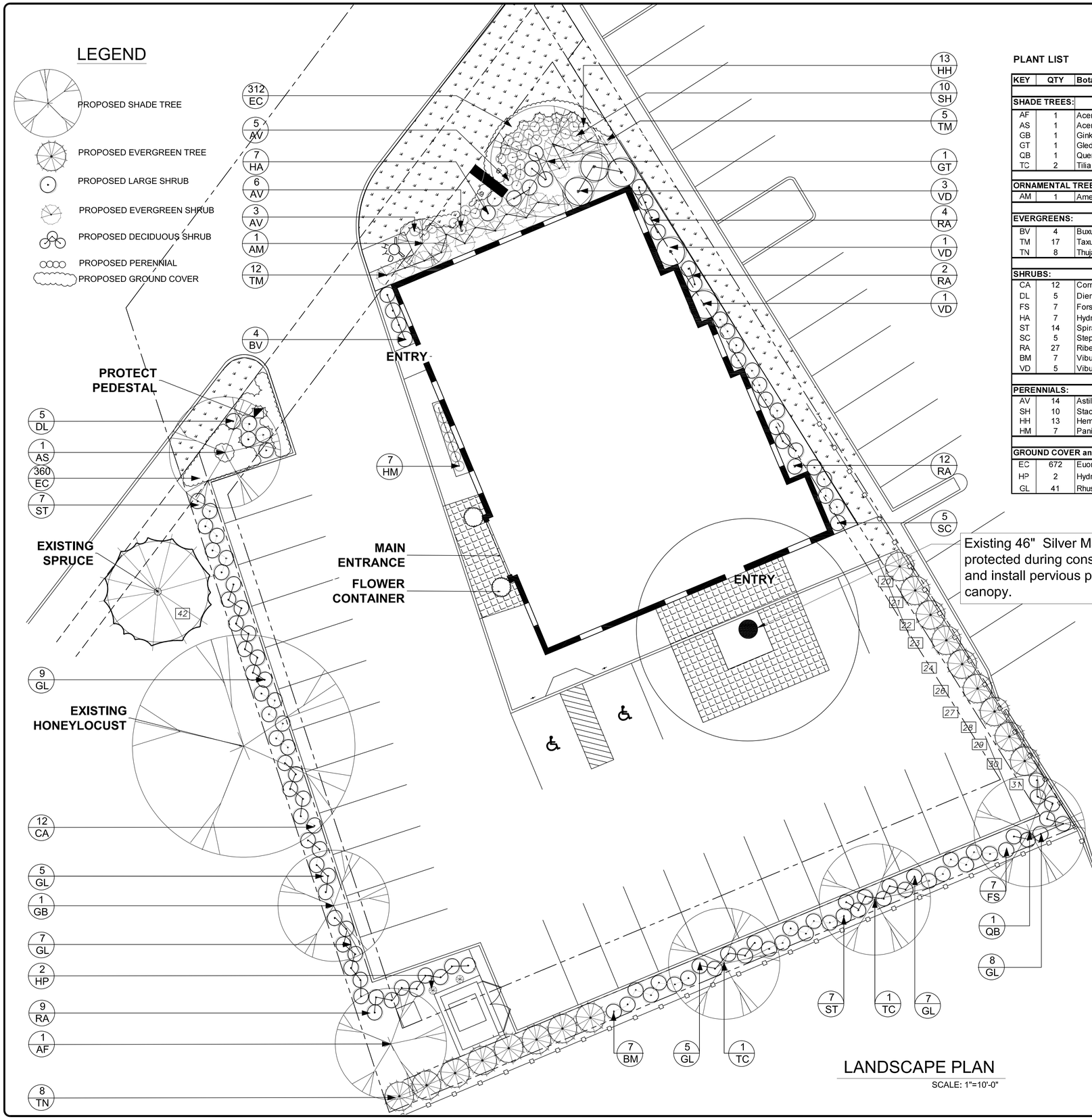

PLANT LIST

KEY	QTY	Botanical Name	Common Name	Size at Planting	Period of Bloom
SHADE TREES:					
AF	1	Acer freemanii ' Armstrong'	Armstrong Red Maple	2-1/2" cal. B&B	Red
AS	1	Acer saccharum ' Green Mountain'	Green Mountain Sugar Maple	4" cal. B&B	green-yellow
GB	1	Ginkgo Bibloba ' Autumn Gold'	Autumn Gold Gingko	3" cal. B&B	inconspicuous
GT	1	Gleditsia triacanthos var. inermis 'Skyline'	Skyline Thornless Honelocust	4" B&B	inconspicuous
QB	1	Quercus bicolor	Swamp White Oak	3" cal. B&B	Spring dig only
TC	2	Tilia cordata 'Greenspire'	Greenspire Linden	4" cal. B&B	yellow/fragrant
ORNAMENTAL TREES:					
AM	1	Amelanchier 'Autumn Brillance'	Autumn Brillance Serviceberry	8' clump	white/April/May
EVERGREENS:					
BV	4	Buxus microphylla 'Green Velvet'	Green Velvet Boxwood	24" B&B/ 5 gal. cont.	N/A
TM	17	Taxus media densiformis	Dense spreading yew	24" BB/ 7 gal. cont.	N/A
TN	8	Thuja occidentalis 'Nigra'	Dark American Arborvitae	8' B&B	N/A
SHRUBS:					
CA	12	Cornus alba Ivory Halo 'Bailhalo'	Ivory Halo Dogwood	36"/ 5 gal. cont.	May/June
DL	5	Diervilla lonicera	Bush Honeysuckle	30"/ 5 gal. cont.	June/July
FS	7	Forsythia intermedia ' Show Off'	Show Off Forsythia	36"/ 5 gal. cont.	March/April
HA	7	Hydrangea arborescens ' Annabelle'	Annabelle Hydrangea	30"/ 5 gal. cont.	June/July
ST	14	Spiraea betulifolia 'Tor'	Tor Birchleaf Spirea	24"/5 gal. cont.	May/June
SC	5	Stephandra incisa 'Crispa'	Crispa Cutleaf Stephandra	24"/5 gal. cont.	insignificant
RA	27	Ribes alpinum ' Green Mound'	Green Mound Alpine Currant	30"/ 5 gal. cont.	April
BM	7	Viburnum dentatum 'Blue Muffin'	Blue Muffin Viburnum	36"/ 5 gal. cont.	June
VD	5	Viburnum dentatum 'Chicago Lustre'	Chicago Lustre Viburnum	3' B&B	June
PERENNIALS:					
AV	14	Astilbe chinensis 'Visions'	Visions Astilbe	#1 cont.	June/Purple/Rose
SH	10	Stachy 'Hummelo'	Betony	#1 cont.	July/Aug - Rose
HH	13	Hemerocallis ' Happy Returns'	Happy Returns Daylily	#1 cont.	Yellow-/continuous
HM	7	Panicum virgatum' Heavy Metal'	Switch Grass	#1 cont.	Steel Blue/continuous
GROUND COVER and VINES:					
EC	672	Euonymus fortunei var. 'coloratus'	Purple Wintercreeper	2-1/4" pots	NA
HP	2	Hydrangea anomala petiolaris	Climbing Hyrangea	5 gal. cont.	white flower June/July
GL	41	Rhus aromatica - 'Grow--low'	Grow low Fragrant sumac	3 gal. cont.	red fall color

LANDSCAPE PLAN

SCALE: 1"=10'-0"

NOTES:
1. Do not allow air pockets to form when backfilling.
2. Leave 10" of stake above grade for easy removal.
3. Tree should be secured with guy wires spaced 120° apart. Tree shall stand plumb. Guy wires to be removed at the end of guarantee period.

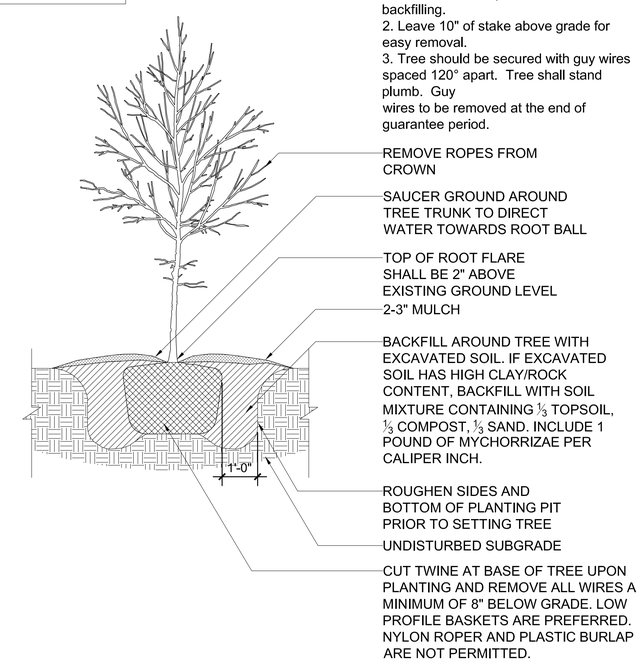

1 / L1 TYPICAL TREE PLANTING

SCALE: 1/2"=1'-0"

Sara E.F. Gensburg, Ltd.
Architecture/Design
105 Revere Drive - Suite G
Northbrook, IL 60062
Fax: (847) 715-9561
Phone: (847) 715-9591

NLH LANDSCAPE ARCHITECTS
2290 Lincoln Avenue Highland Park, Illinois 60035 (847) 432-7183

MEDICAL OFFICE BUILDING
231 OLDE HALF DAY ROAD
LINCOLNSHIRE, ILLINOIS

No.	Date:	Issued:
-	03-12-19	Issued for Preliminary Evaluation
-	04-08-19	DRT Progress Set
-	08-20-19	Architectural Review Board Set - Revised

SEFG No. 118320
Drawn: DBF
Checked: S.E.F.G.
Date: 03-04-19

SHEET: L1

Sheet 1 of 1

Document 1

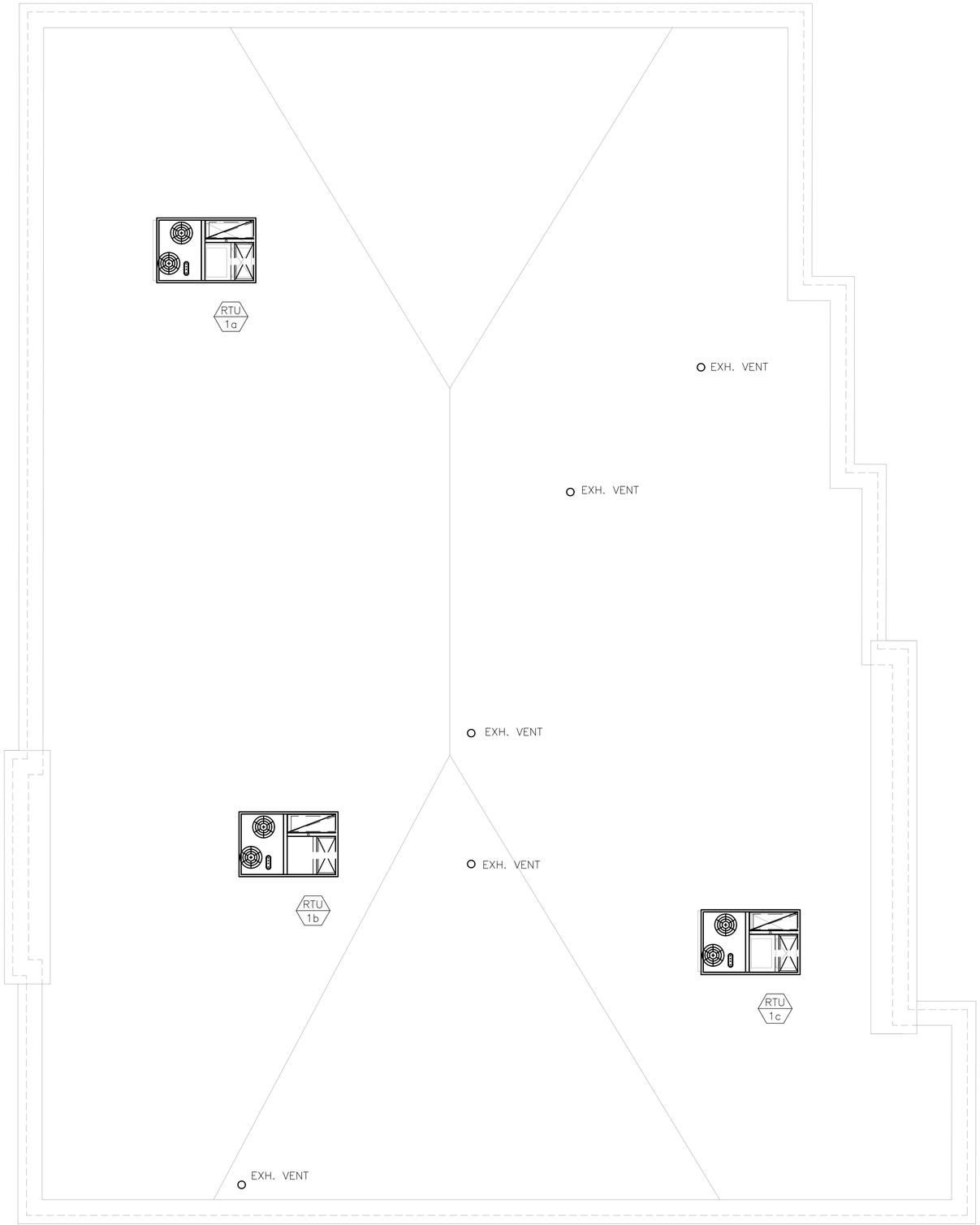

A
M-4
ROOF LEVEL HVAC PLAN
SCALE: 1/4" = 1'-0"

Sara E.F. Gensburg, Ltd.
Architecture/Design
105 Revere Drive - Suite G
Northbrook, IL 60062
Fax: (847) 715-9581
Phone: (847) 715-9591

MEDICAL OFFICE BUILDING
231 OLDE HALF DAY ROAD
LINCOLNSHIRE, ILLINOIS

No.	Date:	Issued:
-	06-17-19	Issued for Preliminary Evaluation

Engineering Consultants Inc.
20 N. WACKER - STE 1910
Chicago, Illinois 60606
PH: (312) 944-8409
FAX (312) 944-8432

Project No. 19014

SEFG No. 118320	SHEET:
Drawn: JRM	M-4
Checked: BPE	
Date: 03-04-19	Sheet X OF X

Document 1

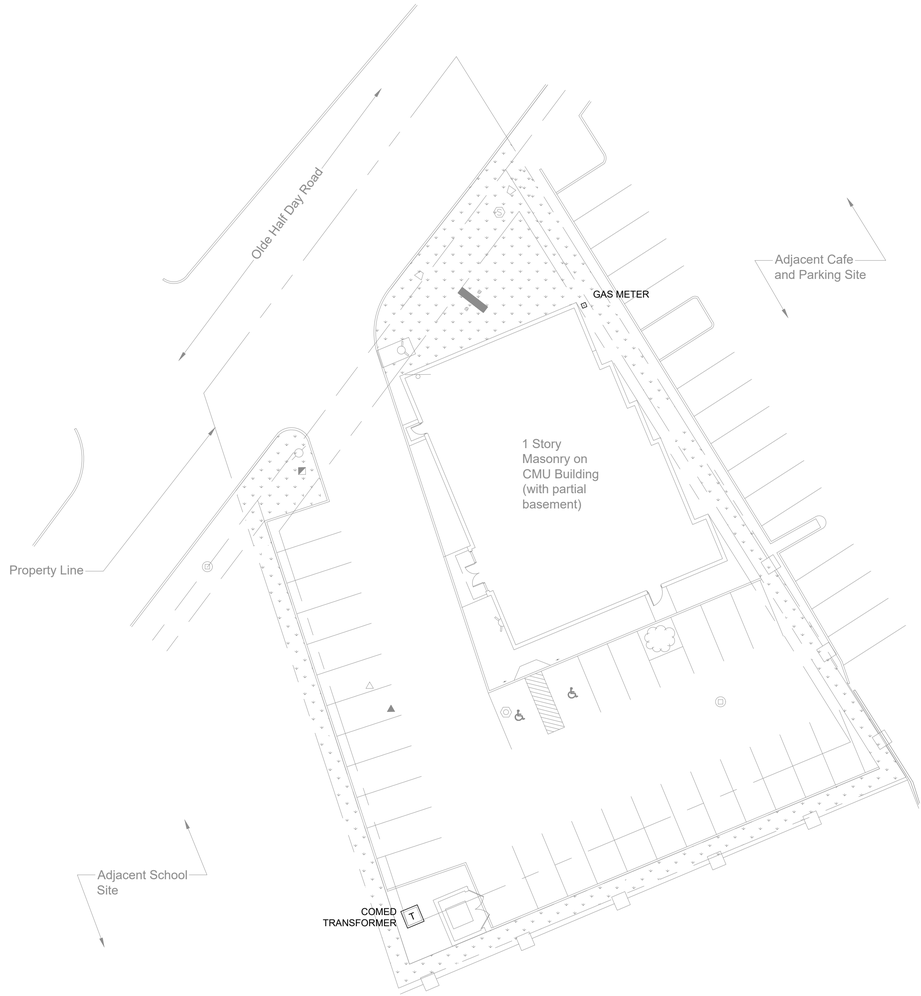

A
E-1
ELECTRICAL SITE PLAN
SCALE: 1" = 20'

Sara E.F. Gensburg, Ltd.
Architecture/Design
105 Revere Drive - Suite G
Northbrook, IL 60062
Fax (847) 715-9581
Phone: (847) 715-9591

MEDICAL OFFICE BUILDING
231 OLDE HALF DAY ROAD
LINCOLNSHIRE, ILLINOIS

No.	Date:	Issued:
1	06-17-19	Issued for Preliminary Evaluation

Engineering Consultants Inc.
20 N. WACKER - STE 1910
Chicago, Illinois 60606
PH: (312) 944-8409
FAX (312) 944-8432

Project. No. 19014

SEFG No. 118320	SHEET:
Drawn: JRM	E-1
Checked: BPE	
Date: 03-04-19	Sheet X OF X

Document 1

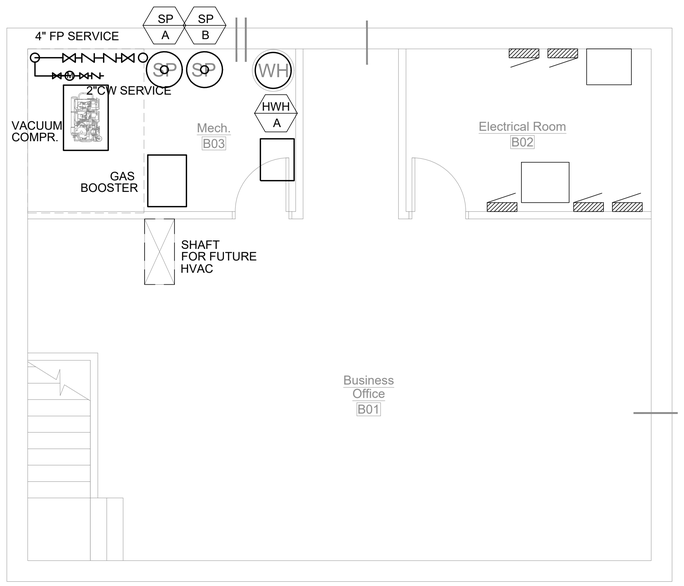

B
E-2
BASEMENT LEVEL PLAN
SCALE: 1/4" = 1'-0"

Sara E.F. Gensburg, Ltd.
Architecture/Design
105 Revere Drive - Suite G
Northbrook, IL 60062
Fax (847) 715-9581
Phone: (847) 715-9591

MEDICAL OFFICE BUILDING
231 OLDE HALF DAY ROAD
LINCOLNSHIRE, ILLINOIS

No.	Date:	Issued:
-	06-17-19	Issued for Preliminary Evaluation

Engineering Consultants Inc.
20 N. WACKER - STE 1910
Chicago, Illinois 60606
PH: (312) 944-8409
FAX (312) 944-8432

Project No. 19014

SEFG No. 118320	SHEET:
Drawn: JRM	E-2
Checked: BPE	
Date: 03-04-19	Sheet X OF X

Document 1

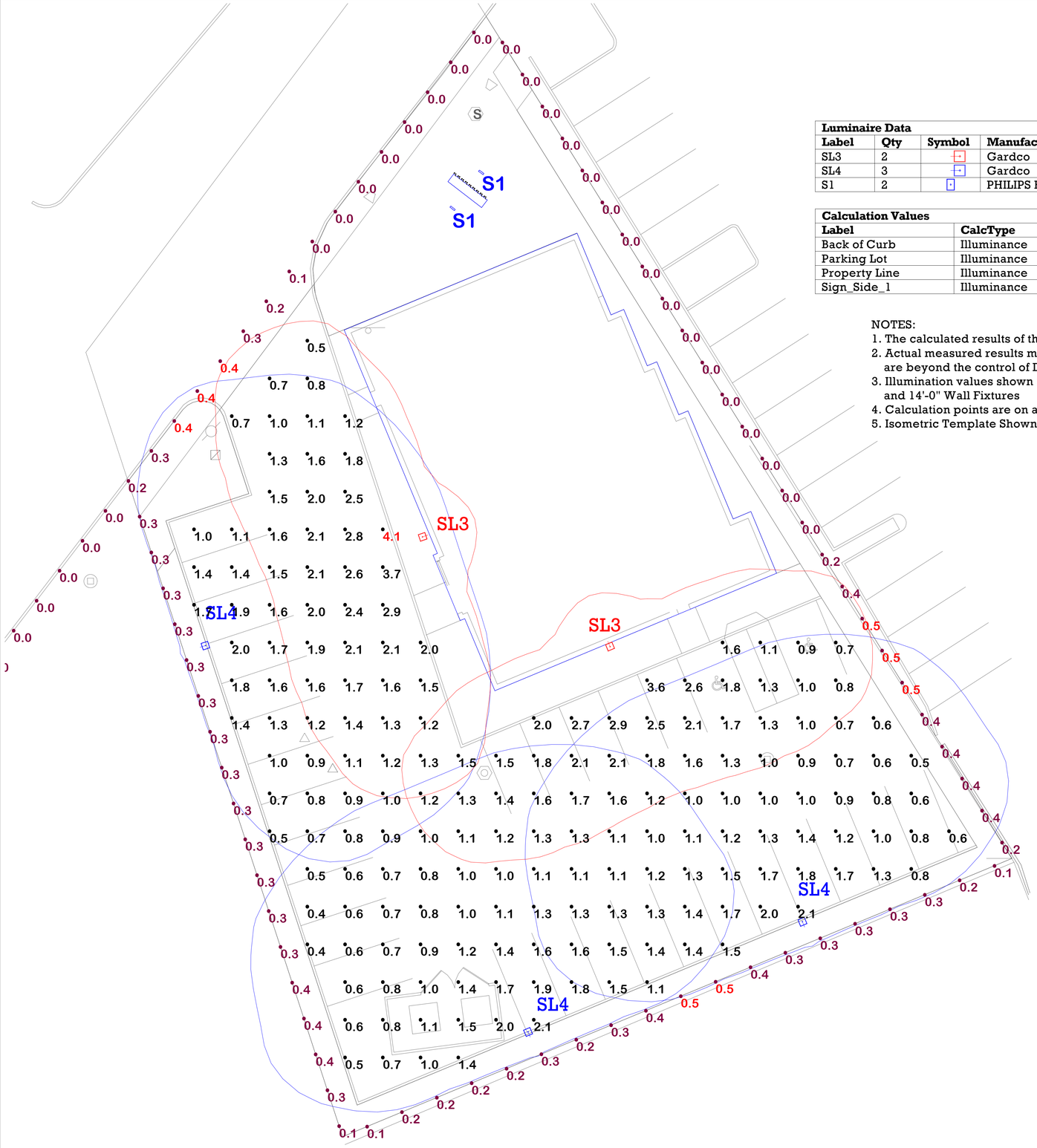

Luminaire Data							
Label	**Qty**	**Symbol**	**Manufacture**	**Description**	**Lum. Lumens**	**LLF**	**Lum. Watts**
SL3	2		Gardco	ECF-S-32L-530-NW-G2-3-HIS	5349	0.850	55.7
SL4	3		Gardco	ECF-S-32L-530-NW-G2-4-HIS	5509	0.850	55.7
S1	2		PHILIPS HADCO	WBM1DF-G2	964	0.850	10.6

Calculation Values							
Label	**CalcType**	**Units**	**Avg**	**Max**	**Min**	**Avg/Min**	**Max/Min**
Back of Curb	Illuminance	Fc	0.10	0.4	0.0	N.A.	N.A.
Parking Lot	Illuminance	Fc	1.36	4.1	0.4	3.40	10.25
Property Line	Illuminance	Fc	0.23	0.5	0.0	N.A.	N.A.
Sign_Side_1	Illuminance	Fc	2.57	5.5	0.4	6.43	13.75

NOTES:
1. The calculated results of this lighting simulation represent a prediction of system performance and are not guaranteed.
2. Actual measured results may vary from the anticipated performance and are subject to means and conditions which are beyond the control of DB Lighting Consultation.
3. Illumination values shown (in foot-candles) are horizontal at grade level based on Mounting Height of 20'-0" Pole Fixtures and 14'-0" Wall Fixtures
4. Calculation points are on an 8' x 8' spacing
5. Isometric Template Shown Represents 0.25fc and is for reference purpose only.

Not to Scale

DB Lighting Consultation (DBLC) assumes no responsibility for any errors in the IES files, background images, or other information provided to DBLC to be used in these calculations.
Actual or measured results may vary due to manufacturer tolerances, component malfunctions, obstructions, varying surface reflectance's and other field conditions.
The owner assumes all responsibility for compliance with federal, state and/or local codes and regulations.

Prepared For:
Dann Grist

Prepared by:
DB Lighting Consultation
407-324-4113

Chicago Lightworks
505 Warrenville Rd.
Suite 101
Lisle, IL 60532

Rev	Date	Comments
R1	06/04/19	Added Sign Lighting
..	....	....
..	....	....
..	....	....
..	....	....

Revisions

Project Name:
Olde Half Day Road Parking

Project ID Number: **2019-169**

Date: **04/04/2019**

24" x 36"

Document 1

B C I

B O N O C O N S U L T I N G, I N C.

July 10, 2019

Robert D. Gardiner, P.E., CFM
Permit Engineer
Lake County Stormwater Management Commission

RE: Watershed Development Permit Application #WDP-19-285
Lake County #INCORP-025928-2019
Proposed Medical Office Building, 231 Olde Half Day Road
LAKE COUNTY DEPARTMENT REVIEWS

Dear Mr. Gardiner,

We have received your comments on the new Medical Office at above address and have revised the plans accordingly.

Attached for your further review and approval:

1. PDF set of full-size civil engineering plans.

The following are our responses to your comments, our responses are in bold.

Sincerely,

Minkai Wang

Minkai Wang
Civil Engineer 1
Bono Consulting, Inc.

1. Please provide contact information for the current property owner NJB Real Estate, LLC as the information on the permit application form was not legible.
   NJB Real Estate, LLC
   302 Saunders Road, Suite 100
   Riverwoods, IL 60015
   Attn: Neil Borkan

2. Please clarify the status of the property with respect to purchase and property ownership. SMC can only issue a permit to the property owner.
   The property is currently under contract, the current owner is NJB Real Estate. Most probably in June/July the new owner will finalize purchasing the land. The future owner understands that the permit will not be issued until he owns the property.

3. The review fee due to the SMC for the proposed activity is $2,120 (6/2/2016 fee schedule #11020, minor development, no detention). Please provide the fee with or prior to the next submittal and include a reference to SMC number: WDP-19-285 on the payment. Please note that this fee includes a total of three (3) reviews. An additional fee, in the amount of 1/3 of the base fee, will be assessed to cover up to three (3) additional reviews.
   Owner to pay required fees.

4. A refundable inspection deposit of $2,300 ($1,800 inspection deposit + $500 preconstruction meeting deposit) to ensure SMC is notified of the pre-construction meeting and to cover the cost of additional inspections that would be necessary if the construction site is determined to be in violation of the permit conditions (e.g. erosion control violations). The refund for the $500 pre-construction deposit can be requested, in writing, after the meeting. The remaining $1,800 deposit (minus any and all assessed fees) shall be refunded after permanent site stabilization and approval of an appropriate as-built submittal that verifies that the project was completed in accordance with the permitted plan set.
   Owner to pay required fees.

5. SMC requests that the building downspouts are directed to a storm sewer inlet and not to the east where runoff could impact the adjacent parcel.
   There will be one connection from roof drain to the storm sewer inlet west of the building. No downspouts will be directed to adjacent parcel.

6. Please provide calculations showing that stormwater detention is not required for this development. The proposed impervious area minus the impervious area as of October 1992 (use of spring 1993 aerial is acceptable) must be less than 0.5-acre.
   The proposed impervious area is shown on sheet C-1. Total proposed impervious is 0.41 acre.

7. Please enhance the plans to include the SMC standard Soil Erosion /Sedimentation Control (SE/SC) and Typical Construction Sequencing notes, as appropriate. They can be obtained from the SMC website at:

Civil Engineers Specializing In Drainage & Grading Plans •
1601 Bond Street, Suite 305 • Naperville, Illinois 60563 • Phone (331) 229-3512 • Fax (847) 823-3303

https://www.lakecountyil.gov/2352/Checklists-Design-Guidance
Notes added on sheet C-4.

8. Please enhance the drawings to include a stabilized construction entrance (CA-1 stone, or EO approved equivalent) or clarify how streets will be kept clean of tracked mud. (WDO 600.10).
   A stabilized construction entrance has been provided on sheet C-0.1

9. Please clarify how any disturbed area that is not impervious will be stabilized (sod, grass seed with blanket, etc.).
   Disturbed area that is not impervious will be restored with top soil and sod. See Soil Erosion and Sedimentation Control Notes #6 & #7 on sheet C-2.

Health Department - Environmental Health - Requires Re-Submit
This project is proposed to be served by public water and sewer. The plans indicate a septic tank and drywell exist behind the existing building. A tank elimination permit is required to eliminate these. A Lake County licensed septic system installation contractor must obtain the permit. The tanks must be pumped (by a licensed septic tank pumper), crushed and filled. Please contact the Lake County Health for additional information.
There is no septic tank on site. The topography shows an existing connection to village sanitary sewer.

Civil Engineers Specializing In Drainage & Grading Plans •
1601 Bond Street, Suite 305 • Naperville, Illinois 60563 • Phone (331) 229-3512 • Fax (847) 823-3303

Document 1

BONO CONSULTING, INC.

June 4, 2019

LDT LLC or Current Owner
410 Milwaukee Ave
Lincolnshire, IL 60069

Subject: Proposed development at 231 Olde Half Day Road

Dear Property Owner,

The owner of 231 Olde Half Day Road have submitted permit drawings to the Village of Lincolnshire for the construction of a new medical office building. As part of the Village's permitting process, the Village engineer has reviewed the plans and recommended us to connect the proposed storm sewer to the existing structure (Inlet-4). The structure is located within the parcel to the east (PIN# 1515400034), in front of an existing parking lot.

If you approve the proposed connection, please sign and return the attached certification statement and return to the owner of 231 Olde Half Day Road.

Thank you for your assistance and cooperation. If you have any questions or need additional information, please contact me at (331) 229-3512.

Sincerely,

Minkai Wang
Engineer I

Civil Engineers Specializing In Drainage & Grading Plans
1018 Busse Highway • Park Ridge, Illinois 60068 • Phone (847) 823-3300 • Fax (847) 823-3303

Document 1

AGREEMENT

As the owner(s) of 410 Milwaukee Ave, Lincolnshire, by signing this document, I/we acknowledge that I/we have reviewed the Utility Plan for 231 Olde Half Day Road, Lincolnshire, dated 05-22-2019, and understand its contents.

I/we hereby certify that I/we allow the owners of 231 Olde Half Day Road, Lincolnshire to connect the existing storm sewer structure near northwest corner of the existing asphalt parking lot in Parcel 1515400034.

Owner's Printed Name_____

Address_____

Signed_____

Date_____

Document 1

MANHATTAN COLLECTION

Manhattan 22" LED Wall Light Textured Black

49298BKTLED (Black)

Project Name: _____

Location: _____

Type: _____

Qty: _____

Comments: _____

Certifications/Qualifications

Location Rating	Wet
Title 24 Compliant	Yes
Warranty	www.kichler.com/warranty

Dimensions

Base Backplate	21.75 X 6.75
Extension	3.75"
Weight	8.40 LBS
Height from center of Wall opening (Spec Sheet)	11.00"
Height	22.00"
Width	7.00"

Electrical

Input Voltage	Single(120)V

Mounting/Installation

Interior/Exterior	Exterior
Mounting Weight	4.80 LBS

Photometrics

Color Rendering Index	90
Delivered Efficacy (Lumens/Watt)	30
Delivered Lumens	550
Kelvin Temperature	3000

Primary Lamping

Dimmable	Yes
Expected Life Span	40000
Lamp Included	Integrated
Light Source	LED
Max or Nominal Watt	20.5W
# of Bulbs/LED Modules	2

Product/Ordering Information

SKU	49298BKTLED
Finish	Black
Style	Contemporary
UPC	783927541206

Specifications

Diffuser Description	White Glass
Material	ALUMINUM

Document 1

PHILIPS

GARDCO

Site & Area

EcoForm

ECF-S small

Project:

Location:

Cat.No:

Type:

Qty:

Notes:

The Philips Gardco EcoForm Gen-2 combines economy with performance in an LED area luminaire. Capable of delivering up to 26,400 lumens or more in a compact, low profile LED luminaire, EcoForm offers a new level of customer value. EcoForm features an innovative retrofit arm kit, simplifying site conversions to LED by eliminating the need to drill additional holes in most existing poles. Integral control systems available for further energy savings.

Ordering guide

example: ECF-S-64L-900-NW-G2-AR-5-120-HIS-MGY

Prefix	Number of LEDs	Drive Current	LED Color - Generation	Mounting	Distribution	Voltage	Options: Controls	Options: Electrical	Options: Luminaire	Finish
ECF-S										
ECF-S EcoForm Site and Area, Small	**32L** 32 LEDs (2 modules)	**530** 530 mA **700** 700 mA **1A** 1050 mA **1.2A** 1200 mA	**WW-G2** Warm White 3000K, 70 CRI Generation 2 **NW-G2** Neutral White 4000K, 70 CRI Generation 2 **CW-G2** Cool White 5000K, 70 CRI Generation 2	**AR** Arm Mount (standard)[9] *The following mounting kits must be ordered separately (See accessories)* **SF** Slip Fitter Mount[11] (fits to 2 3/8" O.D. tenon) **WS** Wall mount with surface conduit rear entry permitted **RAM** Retrofit arm mount kit[9]	**Type 2** **2** Type 2 **2-90** Rotated left 90° **2-270** Rotated right 270° **Type 3** **3** Type 3 **3-90** Rotated left 90° **3-270** Rotated right 270° **Type 4** **4** Type 4 **4-90** Rotated left 90° **4-270** Rotated right 270° **Type 5** **5** Type 5 **5W** Type 5W **AFR** Auto Front Row **AFR-90** Auto Front Row, Rotated left 90° **AFR-270** Auto Front Row, Rotated right 270°	**120** 120V **208** 208V **240** 240V **277** 277V **347** 347V **480** 480V **UNV** 120-277V (50/60Hz) **HVU** 347-480V (50/60Hz)	**DD** 0-10V Dimming Driver[5] **DCC** Dual Circuit Control[6] **Photoelectric/Receptacle systems (Twist Lock Receptacle)** **PCB** Photocontrol Button[2,3] **TLRD5** Twist Lock Receptacle 5 Pin **TLRD7** Twist Lock Receptacle 7 Pin **TLRPC** Twist Lock Receptacle w/Photocell[2] **DynaDimmer:** Automatic Profile Dimming **CS50** Safety 50% Dimming, 7 hours[1] **CM50** Median 50% Dimming, 8 hours[1] **CE50** Economy 50% Dimming, 9 hours[1] **DA50** All Night 50% Dimming[1] **Infrared Motion Response Systems** **IMRI3** Integral with #3 lens[8] **IMRI7** Integral with #7 lens[8] **Pole Mounted Infrared Motion Response systems with DynaDimmer** **CS50-IMRO** with Safety 50% Dimming[1,5] **CM50-IMRO** with Median 50% Dimming[1,5] **CE50-IMRO** with Economy 50% Dimming[1,5] **DA50-IMRO** with All Night 50% Dimming[1,5] **Network system (SiteWise)** **SW** Integral module[12,13] **SW-IMRO** Pole mounted motion response option **Wireless system** **LLC2** Integral module with #2 lens[1,6] **LLC3** Integral module with #3 lens[1,6] **LLC4** Integral module with #4 lens[1,6]	**TB** Terminal Block[7] **Fusing** **F1** Single (120, 277, 347VAC)[2] **F2** Double (208, 240, 480VAC)[2] **Pole Mount Fusing** **FP1** Single (120, 277, 347VAC)[2] **FP2** Double (208, 240, 480VAC)[2] **FP3** Canadian Double Pull (208, 240, 480VAC)[2] **Surge Protection** **SP1** Standard 10kA **SP2** Increased 20kA	**RPA** Round Pole Adapter (fits to 3"- 3.9" O.D. pole)[10] **HIS** Internal House Side Shield[4]	**Textured** **BK** Black **WH** White **BZ** Bronze **DGY** Dark Gray **MGY** Medium Gray **Customer specified** **RAL** Specify optional color or RAL (ex: RAL7024) **CC** Custom color (Must supply color chip for required factory quote)
	48L 48 LEDs (3 modules)	**900** 900 mA **1A** 1050 mA **1.2A** 1200 mA								
	64L 64 LEDs (4 modules)	**900** 900 mA **1A** 1050 mA								

1. Available only on **120**, **208**, **240**, and **277** (or **UNV**)
2. Specify Voltage
3. Not available with **347** or **480** voltage
4. **HIS** not available with Type **5** or **5W** optics
5. **DD** is required for **LLCR** and pole mount motion sensor. Dimming leads are supplied through back of luminaire. **Must be ordered separately** (See accessories page)
6. **DCC** and **LLC2/3/4** not available with any other controls
7. **TB** not available with **DCC**
8. **ECF-IMRI** equipped with out-boarded sensor housing when voltage is **HVU** (347-480V)
9. Mounts to a 4" round pole with adapter included for square poles.
10. Not available with **SF** and **WS**. **RPA**s provided with black finish standard
11. Limited to a maximum of 45 degrees aiming above horizontal
12. **SW** option is not available with any other control options with the exception of **IMRI3**, **IMRI7** and **SW-IMRO** motion response options
13. Available only on **120V** and **277V**

ECF-S EcoForm small

Site & Area

EcoForm Accessories (ordered separately, field installed)

Controls Accessories

Pole Mount Motion Sensor

MS-A-120V [11] 120V Input
MS-A-277V [11] 277V Input

Wireless systems
Remote mount module

LLCR2-(F) [11] #2 lens
LLCR3-(F) [11] #3 lens
LLCR4-(F) [11] #4 lens

Central Remote Motion Response
(used connected to SiteWise main panel)

MS2-A-FVR-3
MS2-A-FVR-7

11. **DD** option required
12. Not available with Type **5** or **5W** optics

Shielding Accessories [10]

House Side shield

Standard orientation:
HIS-32-H [12] Internal House Side Shield for 32 LEDs (2 modules)
HIS-48-H [12] Internal House Side Shield for 48 LEDs (3 modules)
HIS-64-H [12] Internal House Side Shield for 64 LEDs (4 modules)

At 90 or 270 orientation:
HIS-32-V [12] Internal House Side Shield for 32 LEDs (2 modules)
HIS-48-V [12] Internal House Side Shield for 48 LEDs (3 modules)
HIS-64-V [12] Internal House Side Shield for 64 LEDs (4 modules)

Luminaire Accessories

ECF-BD-G2 Bird deterrent
PTF2-(F) Pole top fitter fits 2 3/8-2 1/2" OD x 4" depth tenon with 1, 2, 3 or 4 luminaires at 90°
PTF3-(F) Pole top fitter fits 3-3 1/2" OD x 6" depth tenon with 1, 2, 3 or 4 luminaires at 90°
PTF4-(F) Pole top fitter fits 3 1/2-4" OD x 6" depth tenon with 1, 2, 3 or 4 luminaires at 90°
ECF-SF-G2-(F) Slip Fitter Mount (fits to 2 3/8" O.D. tenon)
ECF-RAM-G2-(F) Retrofit Arm mount kit
ECF-WS-G2-(F) Wall mount with surface conduit rear entry permitted

(F) = Specify finish

Predicted Lumen Depreciation Data

Predicted performance derived from LED manufacturer's data and engineering design estimates, based on IESNA LM-80 methodology. Actual experience may vary due to field application conditions.L_{70} is the predicted time when LED performance depreciates to 70% of initial lumen output. Calculated per IESNA TM21-11. Published L_{70} hours limited to 6 times actual LED test hours

Ambient Temperature °C	Driver mA	Calculated L_{70} Hours	L_{70} per TM-21	Lumen Maintenance % at 60,000 hrs
25°C	up to 1200 mA	>100,000 hours	>60,000 hours	>88%

LED Wattage and Lumen Values

Ordering Code	Total LEDs	LED Current (mA)	Color Temp.[3]	Average System Watts[1]	Type 2			Type 3			Type 4		
					Lumen Output[1,2]	BUG Rating	Efficacy (LPW)	Lumen Output[1,2]	BUG Rating	Efficacy (LPW)	Lumen Output[1,2]	BUG Rating	Efficacy (LPW)
ECF-S-32L-530-NW-G2-x	32	530	4000	56	6,864	B2-U0-G2	123	6,715	B1-U0-G2	121	7,025	B1-U0-G2	126
ECF-S-32L-700-NW-G2-x	32	700	4000	73	8,853	B2-U0-G2	121	8,661	B2-U0-G2	119	9,062	B1-U0-G2	124
ECF-S-32L-1A-NW-G2-x	32	1050	4000	106	12,464	B3-U0-G2	118	12,194	B2-U0-G2	115	12,757	B2-U0-G3	121
ECF-S-32L-1.2A-NW-G2-x	32	1200	4000	122	13,826	B3-U0-G3	114	13,526	B2-U0-G3	111	14,151	B2-U0-G3	116
ECF-S-48L-900-NW-G2-x	48	900	4000	135	16,409	B3-U0-G3	121	16,053	B2-U0-G3	119	16,795	B2-U0-G3	124
ECF-S-48L-1A-NW-G2-x	48	1050	4000	159	18,581	B3-U0-G3	117	18,178	B3-U0-G3	115	19,018	B2-U0-G4	120
ECF-S-48L-1.2A-NW-G2-x	48	1200	4000	183	20,627	B3-U0-G3	113	20,180	B3-U0-G4	110	21,112	B3-U0-G4	116
ECF-S-64L-900-NW-G2-x	64	900	4000	178	21,717	B3-U0-G3	122	21,246	B3-U0-G4	119	22,228	B3-U0-G4	125
ECF-S-64L-1A-NW-G2-x	64	1050	4000	206	24,467	B3-U0-G3	119	23,936	B3-U0-G4	116	25,043	B3-U0-G4	122

Ordering Code	Total LEDs	LED Current (mA)	Color Temp.[3]	Average System Watts[1]	Type 5			Type 5W			Type AFR		
					Lumen Output[1,2]	BUG Rating	Efficacy (LPW)	Lumen Output[1,2]	BUG Rating	Efficacy (LPW)	Lumen Output[1,2]	BUG Rating	Efficacy (LPW)
ECF-S-32L-530-NW-G2-x	32	530	4000	56	7,414	B3-U0-G2	133	7,175	B3-U0-G2	129	7,111	B2-U0-G1	128
ECF-S-32L-700-NW-G2-x	32	700	4000	73	9,563	B3-U0-G2	131	9,255	B4-U0-G2	127	9,172	B2-U0-G1	126
ECF-S-32L-1A-NW-G2-x	32	1050	4000	106	13,462	B4-U0-G2	127	13,030	B4-U0-G2	123	12,912	B3-U0-G2	122
ECF-S-32L-1.2A-NW-G2-x	32	1200	4000	122	14,933	B4-U0-G2	123	14,453	B4-U0-G2	119	14,322	B3-U0-G2	118
ECF-S-48L-900-NW-G2-x	48	900	4000	135	17,723	B4-U0-G2	131	17,154	B5-U0-G3	127	16,999	B3-U0-G2	126
ECF-S-48L-1A-NW-G2-x	48	1050	4000	159	20,069	B5-U0-G3	126	19,424	B5-U0-G3	122	19,248	B3-U0-G2	121
ECF-S-48L-1.2A-NW-G2-x	48	1200	4000	183	22,279	B5-U0-G3	122	21,563	B5-U0-G3	118	21,368	B3-U0-G2	117
ECF-S-64L-900-NW-G2-x	64	900	4000	178	23,456	B5-U0-G3	132	22,702	B5-U0-G3	128	22,497	B3-U0-G2	127
ECF-S-64L-1A-NW-G2-x	64	1050	4000	206	26,427	B5-U0-G3	128	25,577	B5-U0-G4	124	25,346	B3-U0-G2	123

1. Wattage and lumen output may vary due to LED manufacturer forward volt specification and ambient temperature.
   Wattage shown is average for 120V through 277V input. Measured wattage may vary due to variation in input voltage.
2. Lumen values based on photometric tests performed in compliance with IESNA LM-79.
3. Warm white color temperature will result in decreased lumen output.

Contact outdoorlighting.applications@philips.com for details or additional information.

ECF-S EcoForm small

Site & Area

Dimensions

Standard Arm (**AR**)

Weight: 22 Lbs (9.9 Kg) EPA: 0.21ft² (.019m²)

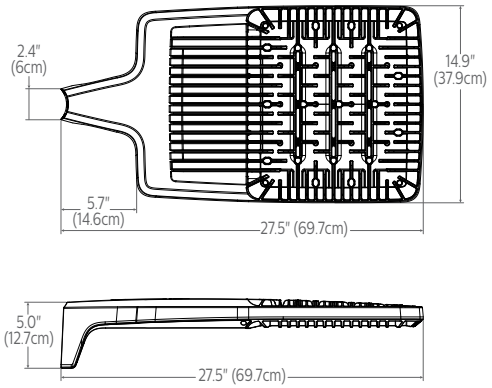

Wall (**WS**)

Weight: 27 Lbs. (12. 2Kg) EPA: 0.27ft² (.025m²)

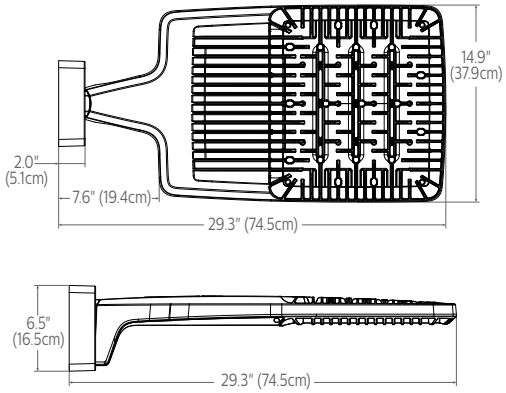

Retrofit Arm (**RAM**)

Weight: 24 Lbs (10.9 Kg) EPA: 0.24ft² (.022m²)

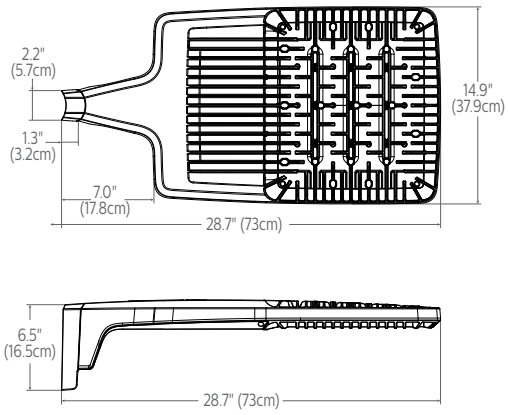

Slip fitter (**SF**)

Weight: 27 Lbs (12.2 Kg) EPA: 0.33ft² (.031m²)

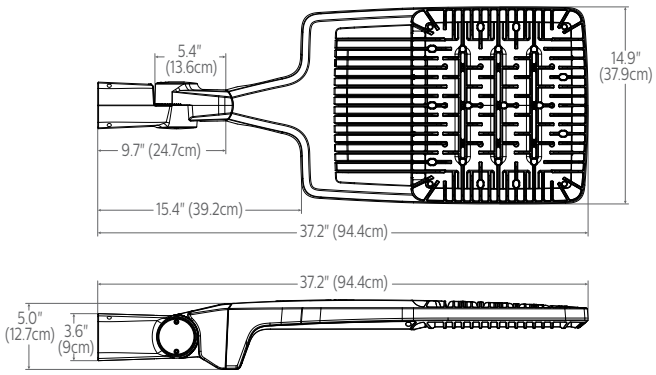

Outboard **IMR-HVU** sensor

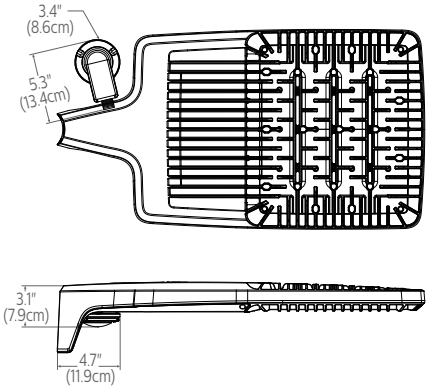

Standard Arm (**AR**) drill pattern

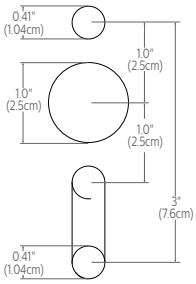

Retrofit Arm (**RAM**) drill pattern

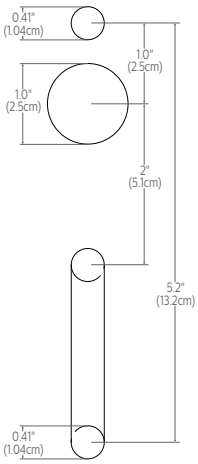

ECF-S EcoForm small

Site & Area

Luminaire options

DD: 0-10V dimming driver with leads supplied through back of luminaire (for secondary dimming controls by others).

TLRD5: Twist Lock Receptacle with 5 pins enabling dimming, can be used with a twistlock photoelectric cell or a shorting cap. Can also be used with Philips or third party control system. Receptacle located on top of luminaire housing.

TLRD7: Twist Lock Receptacle with 7 pins enabling dimming and additional functionality (by others), can be used with twistlock photoelectric cell or a shorting cap. Can also be used with Philips or third party control system. Receptacle located on top of luminaire housing.

TLRDPC: Receptacle with twistlock photoelectric cell (must specify voltage). Receptacle located on top of luminaire housing.

Dynadimmer Automatic Profile Dimming: Automatic dimming profiles (CS50/CM50/CE50) offer safety, median, or economy settings, for shorter or longer duration. Dimming profiles provide flexibility towards energy savings goals while optimizing light levels during specific dark hours. 50% dimming is standard. DA50 offers 50% instantaneous dimming all night (during all dark hours). 75% and 25% dimming is also available if different light levels are required (contact Technical Support for details).

	Dimming		
Profile	Level	Duration	Example
Economy	50%	9 hours	9 PM - 6 AM
Median	50%	8 hours	10 PM - 6 AM
Safety	50%	7 hours	11 PM - 6 AM
Reactive 50	50%	dynamic	all night

IMRI3, IMRI7: Infrared Motion Response Integral. IMRI module is mounted integral on driver door and is available with two different sensor lens types to accommodate various mounting heights and occupancy detection ranges (see charts for approximate detection patterns on page 7). Motion response used in combination of Dynadimmer and SiteWise are not programmable and used to override controllers schedule when motion is detected. When used not combined with any controller, IMRI is set/operates in the following fashion: The motion sensor is set to a constant 50%. When motion is detected by the PIR sensor, the luminaire returns to full power/light output. Dimming on low is factory set to 50% with 5 minute default in "full power" prior to dimming back to low. When no motion is detected for 5 minutes, the motion response system reduces the wattage by 50%, to 50% of the normal constant wattage reducing the light level. IMRI can also be specified with automatic profile dimming for the added benefit of a combined dimming profile with sensor detection, where the PIR sensor will override the dimming profile when occupancy is detected. Passive infrared (PIR) motion sensor.

IMRO: Infrared Motion Response Outboard pole mounted sensor, must be specified with an available automatic profile dimming option. Combines the benefits of both automatic profile dimming and motion response using the Philips DynaDimmer technology. PIR sensor features a pole mounted Wattstopper EW-200-120-W or the EW-200-277-W. One motion sensor per pole is required (order MS-A-120 or MS-A-277 separately). Available in 120 or 277V only, IMRO sensors require single voltage 120V or 277V input (see chart for approximate detection patterns). If motion is detected during the time that the luminaire is operating at profile dimming mode specified, the luminaire returns to 100% power and light output. The luminaire remains on high until no motion is detected for the duration period, after which the luminaire returns back to automatic profile dimming. Duration period is factory set at 15 minutes, and is field adjustable from 5 minutes up to 15 minutes. The area motion detector provides coverage equal to up to 6 times the sensor height above ground, 270° from the front-center of the sensor.

Pole Details: IMRO requires that the pole include an additional hand hole 15 feet above the pole base, normally oriented 180° to the standard hand hole. For Philips Gardco poles, order the pole with the Motion Sensor

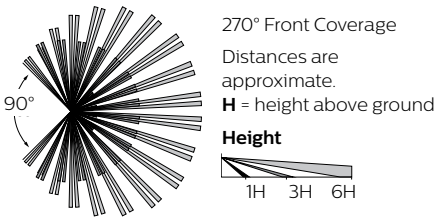

Mounting (MSM) option which includes the hand hole and a special hand hole cover plate for the sensor with a 1/2" NPT receptacle centered on the hand hole cover plate into which the motion sensor mounts. Once the motion sensor is connected to the hand hole cover plate, then wiring connections are completed in the pole. The plate (complete with motion sensor attached and wired) is then mounted to the hand hole. If poles are supplied by others, the customer is responsible for providing suitable mounting accommodations for the motion sensor in the pole (see Gardco Poles specification sheets for more information).

DCC: Dual Circuit Control permits separate switching of a specific number of LED modules. Available as an option with 2 through 4 modules.

SW: SiteWise option is a fully integrated controller that connects to Philips SiteWise system in order to offer a complete area lighting management system. The communication signal is based on Philips patented central dimming technology. SiteWise delivers it deliver optimal energy savings using your site's existing cabling. No additional wiring required, installation and commissioning are simple. An intuitive, mobile app makes it easy for authorized users to set schedules to meet site specific lighting needs, local regulations, and energy codes.

Wireless systems: Controller radio/sensor module attached to luminaire arm and includes radio, photocell and motion sensor. Available with #2 lens (LLC2) for 8' to 15' mounting height" or #3 lens (LLC3) for 15-25' mounting heights or #4 lens (LLC4) for 25-40' mounting heights. Also available with remote pod accessory where pod is mounted separate from luminaire to pole or wall (see accessories and wireless system information page 5-7).

F1: Fusing Single (for 120, 277 or 347VAC)

F2: Fusing Double (for 208, 240 or 480VAC)

FP1: Fusing Pole Single (pole mounted near handhole, for 120, 277 or 347VAC)

FP2: Fusing Pole Double (pole mounted near handhole, for 208, 240 or 480VAC).

FP3: Fusing Pole Canadian Double Pull (pole mounted near handhole, for 208, 240 or 480VAC)

SP1: Surge Protection, 10kV/5kA, 120-277V or 347-480V

SP2: Surge Protection, 20kV/10kA , 120-277V or 347-480V

HIS: Internal House Side Shield. Injection molded in black finish. Ships installed with 1 per 16 LED module. Also available shipped separately as an accessory for 2-4 LED modules.

ECF-S EcoForm small

Site & Area

Wireless system – luminaire configuration information

LLC2/LLC3/LLC4 Luminaire Mounted Controller

Controller pod attached to luminaire and Includes radio, photocell and motion sensor with #2, #3 or #4 lens for 8-40' mounting heights.

Recommended Sensor by Pole Height

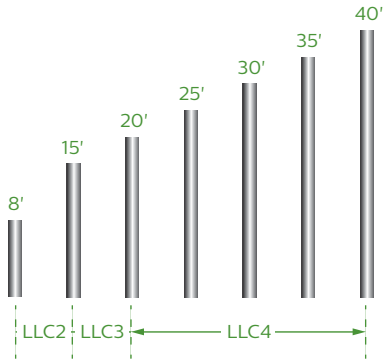

LLCR2/LLCR3/LLCR4 Pole Mounted Controller

In this configuration, the wireless controller will be mounted to the pole at a fifteen foot mounting height. The number of luminaires on each pole, as well as the specific wattage chosen, will determine how many controllers will be required.

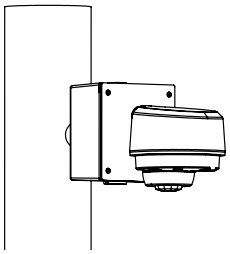

When using the wireless remote accessory option (LLCR-F) in a pole mount application, specify pole option (CL=Coupling Internal Thread, 3/4" size). Confirm required orientation of luminaire and wireless controller. Indicate height above pole base and orientation to hand hole. Recommended min pole height is 18ft, with option (CL) 15ft above pole base. Other heights are possible when choosing the appropriate sensor lens type. See pole specification sheets for more information.

Remote Mount Wireless Controller

Used to extend the communication on site, to extend motion response and add other luminaires that are not pole mounted. Consult factory for more information.

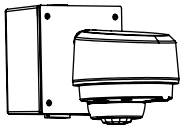

Wireless system sensor

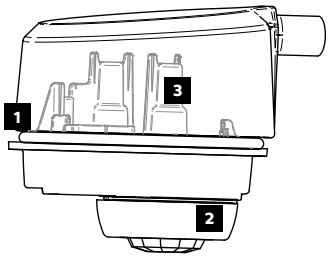

1. Photocell

- Ambient light photocell on every wireless radio that averages the light levels of up to 5 controllers for an accurate reading and optimal light harvesting activity.
- Reports ambient light readings to 1500 Fc.

2. Motion Response

- Detects motion through passive infrared sensing technology with three different lens configurations.
- Motion sensor coverage can be adjusted from a narrow to a wide detection range, which helps reduce false triggers to further increase energy savings.
- Sensing profiles can be updated to adapt to activity levels in the environment, such as occupancy level, wind, and mounting height.

3. Wireless Radio

- 1.8 Watts max (no load draw)
- Operating voltage 120-277 VAC RMS
- Communicates using the ZigBee protocol
- Carries out dimming commands from Gateway
- Reports ambient light readings to 1500 Ft-Cd
- Transmission Systems Operating within the band 2400-2483.5Mhz
- RoHS Compliant

ECF-S EcoForm small

Site & Area

Infrared Motion Response – Coverage Patterns

LLC2/LLCR2
Luminaire or remote mount controller
with #2 lens

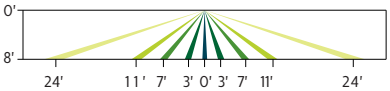

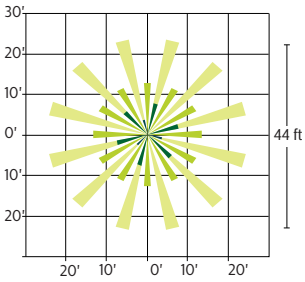

IMRI3/LLC3/LLCR3
Luminaire or Remote mount controller
with #3 lens

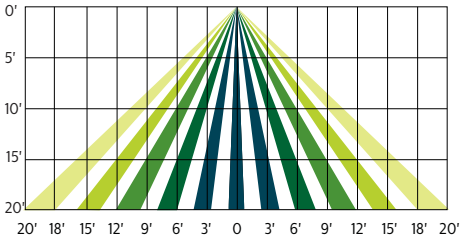

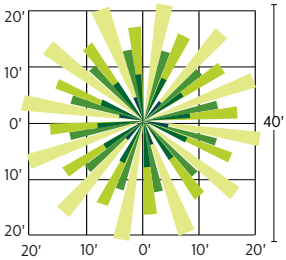

LLC4/LLCR4
Luminaire or Remote mount controller
with #4 lens

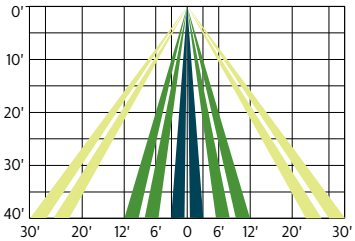

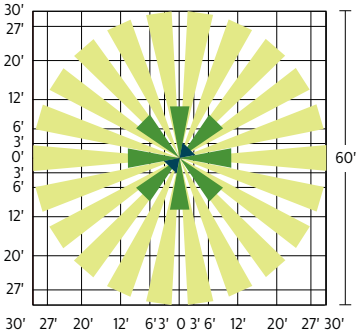

IMRI7
Integral motion response
with #7 lens

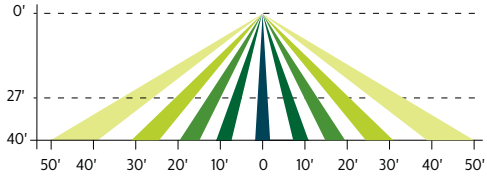

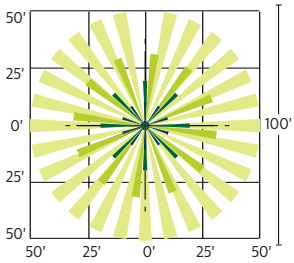

ECF-S EcoForm small

Site & Area

SiteWise system

SiteWise is a complete area lighting management system including a luminaire integrated controller, dimming signal transmitter cabinet, and locally accessible user interface. Installation and commissioning are simple. The cabinet communicates with the Philips luminaires using a patented central dimming technology. The control signal is embedded on the existing electrical line – no new cabling is required. An intuitive, locally accessible interface makes it easy for authorized users to set schedules in order to meet site specific lighting needs, local regulations, and energy codes.

SiteWise system diagram

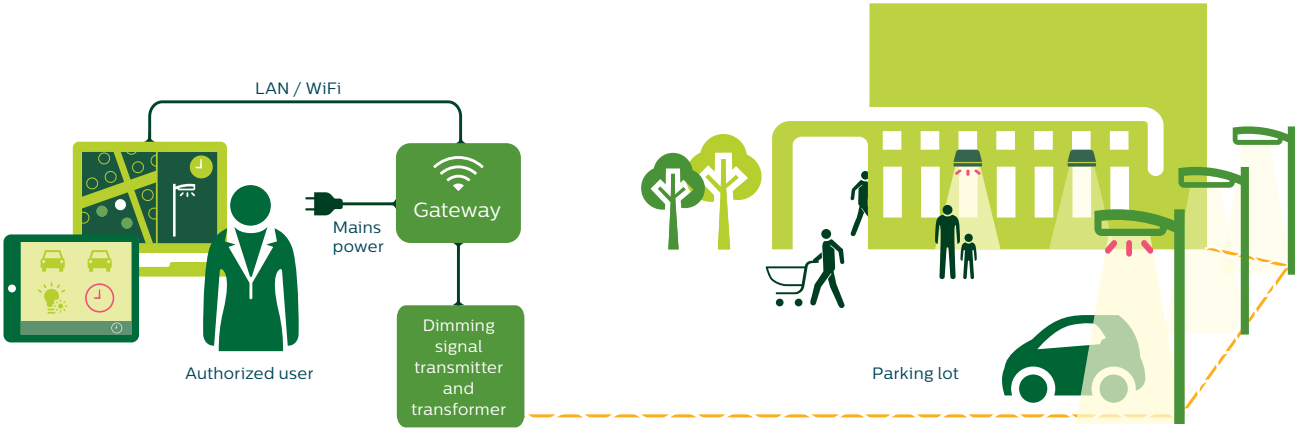

SiteWise system interface

SiteWise has an intuitive user interface that makes it easy to plan, edit, and implement lighting schedules for your site. Authorized users can access the interface via a local app.

To ensure that only authorized users can access your lighting, SiteWise offers two user types, each with different permissions. An advanced user, or administrator, can set and edit schedules using the ten pre-set scenes, assign those schedules to calendar days, and check system status.

For everyday use, a basic user can manually override a schedule that is currently running but cannot create or edit schedules.

SiteWise system specifications

The SiteWise system includes both luminaires and controls. The controls used for SiteWise are circuit load dependent. Required for a complete installation are the following Philips SiteWise components: user interface, control kit, dimming signal transmitter cabinet, and dimming signal receiver located in the Philips luminaire (**SW** option). Optional luminaire-integrated or external motion sensors may also be specified as required. Within the electrical closet, the control kit and dimming signal transmitter cabinet are installed into the electrical system between the existing breaker panel and the site luminaires. New LED luminaires containing the dimming signal receiver are installed on the site. Once completed, use of the interface allows for scheduling and override capabilities. Wireless access point and tablet should be supplied by others. Complete information on the control system can be found on the SiteWise website at **philips.com/sitewise**

ECF-S EcoForm small

Site & Area

Optical Orientation Information

Standard Optic Position

Luminaires ordered with asymmetric optical systems in the standard optic position will have the optical system oriented as shown below:

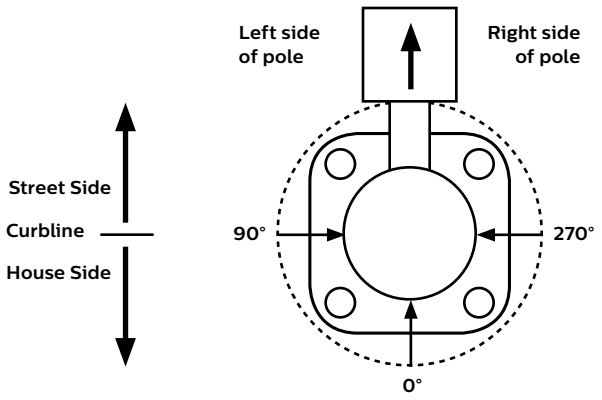

Note: The hand hole will normally be located on the pole at the 0° point.

Optic Rotated Left (90°) Optic Position

Luminaires ordered with optical systems in the Optic Rotated Left (90°) optic position will have the optical system oriented as shown below (Type 5 and 5W optics are not available with factory set rotatable optics):

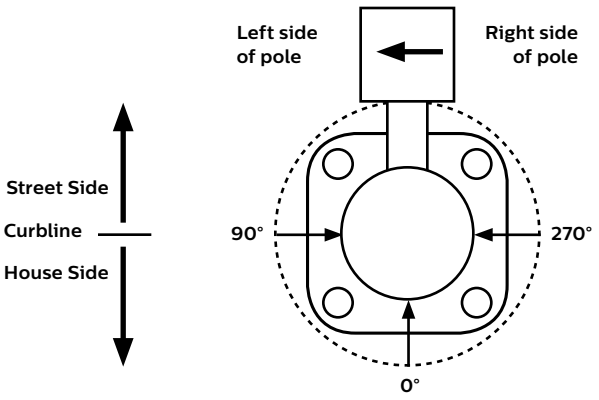

Note: The hand hole will normally be located on the pole at the 0° point.

Optic Rotated Right (270°) Optic Position

Luminaires ordered with optical systems in the Optic Rotated Right (270°) optic position will have the optical system oriented as shown below (Type 5 and 5W optics are not available with factory set rotatable optics):

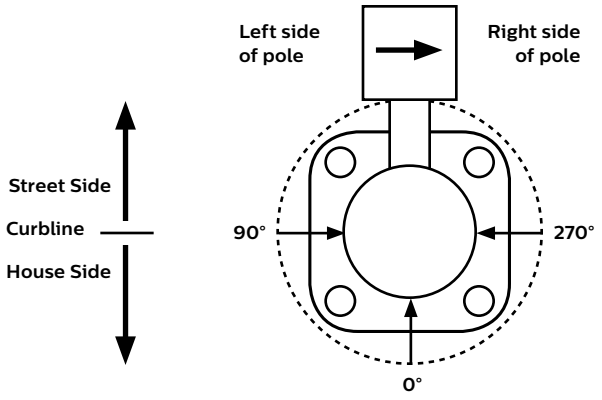

Note: The hand hole will normally be located on the pole at the 0° point.

Twin Luminaire Assemblies with Type-90/Type-270 Rotated Optical Systems

Twin luminaire assemblies installed with rotated optical systems are an excellent way to direct light toward the interior of the site (Street Side) without additional equipment. It is important, however, that care be exercised to insure that luminaires are installed in the proper location.

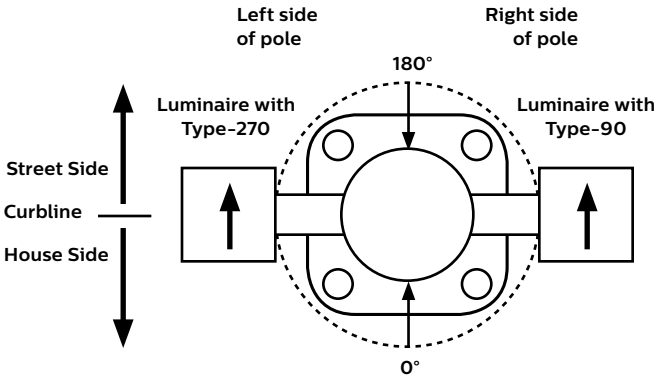

Luminaires with Optic Rotated Right (270°) are installed on the LEFT Side of Pole

Luminaires with Optic Rotated Left (90°) are installed on the RIGHT Side of Pole

Note: The hand hole location will depend on the drilling configuration ordered for the pole.

ECF-S EcoForm small

Site & Area

Specifications

Housing

One piece die cast aluminum housing with integral arm and separate,self retained hinged, one piece die cast door frame.

IP Rating

LED light engine rated IP66. Driver compartment rated to IP65.

Vibration resistance

EcoForm with Standard Arm carries a 3G vibration rating that conforms to standards set forth by ANSI C136.31. Testing includes vibration to 3G acceleration in three axes, all performed on the same luminaire.

Electrical

Driver efficiency (>90% standard). 120-480V available (restrictions apply). Open/short circuit protection. Optional 0-10V dimming to 10% power. RoHS compliant. Surge protector standard. 10KA per ANSI/IEEE C62.41.2.

LED Board and Array

32, 48, or 64 LEDs. Color temperatures: 3000K +/- 125K, 4000K, 5000K +/- 200K. Minimum CRI of 70. Aluminum metal clad board. RoHS compliant.

LED Thermal management

The housing design allows the one piece housing to provide excellent thermal management critical to long LED system life.

Energy saving benefits

System efficacy up to 133 lms/W with significant energy savings over Pulse Start Metal Halide luminaires. Optional control options provide added energy savings during unoccupied periods.

SiteWise network system

SiteWise system includes a controller fully integrated in the luminaire that enables the luminaires to communicate with a dimming signal transmitter cabinet located on site using Philips patented central dimming technology. A locally accessible mobile app allows users to access the system and set functionalities such as ON/OFF, dimming levels and scheduling. SiteWise is available with motion response options in order to bring the light back to 100% when motion is detected. Additional functionalities are available such as communication with indoor lighting and connection to BMS systems.

Wireless system

EcoForm luminaires are available with optional wireless controllers ready to be connected to a Limelight system (sold by other). The system allows you to wirelessly manage the entire site, independent lighting groups or individual luminaires while on-site or remotely. Based on a high density mesh network with an easy to use web-based portal, you can conveniently access, monitor and manage your lighting network remotely. Wireless controls can be combined with site and area, pedestrian, and parking garage luminaires as well, for a completely connected outdoor solution.

Optical systems

Type 2, 3, 4, 5, 5W, and AFR distributions available. Internal Shield option mounts to LED optics and is available with Type 2, 3, 4, and AFR distributions to control backlight.

Types 2, 3, 4, and AFR, when specified and used as rotated, are factory set only.

Mounting

Standard luminaire arm mounts to 4" round poles. Square pole adapter included with every luminaire. Round Pole Adapter (RPA) required for 3-3.9" poles.

Retrofit Arm Mount

EcoForm features an innovative retrofit arm kit. When specified with the retrofit arm (RAM) option, EcoForm seamlessly simplifies site conversions to LED by eliminating the need for additional pole drilling on most existing poles. RAM will be boxed separately.

Listings

UL/cUL listed to the UL 1598 standard, suitable for Wet Locations. Suitable for use in ambients from -40° to 40°C (-40° to 104°F). The quality systems of this facility have been registered by UL to the ISO 9001 series standards. Most EcoForm configurations are DesignLights Consortium® qualified. Consult DLC Qualified Products list for more details.

Finish

Each standard color luminaire receives a fade and abrasion resistant, electrostatically applied, thermally cured, triglycidal isocyanurate (TGIC) textured polyester powdercoat finish. Standard colors include bronze (BZ), black (BK), white (WH), dark gray (DGY), and medium gray (MGY). Consult factory for specs on optional or custom colors.

Warranty

EcoForm luminaires feature a 5 year limited warranty. Philips Gardco LED luminaires with LED arrays feature a 5 year limited warranty covering the LED arrays. LED Drivers also carry a 5 year limited warranty. Motion sensors are covered by warranty for 5 years by the motion sensor manufacturer.

© 2017 Philips Lighting Holding B.V. All rights reserved.
Philips reserves the right to make changes in specifications and/or to discontinue any product at any time without notice or obligation and will not be liable for any consequences resulting from the use of this publication.
philips.com/luminaires

Philips Lighting North America Corporation
200 Franklin Square Drive, Somerset, NJ 08873
Tel. 855-486-2216

Philips Lighting Canada Ltd.
281 Hillmount Rd, Markham, ON, Canada L6C 2S3
Tel. 800-668-9008

RTU-7.5

Tag Cover Sheet
Unit Report
Certified Drawing
Performance Report

Unit Report For RTU-7.5

Project: 04/01/2019
Prepared By: Mallory Schaus 10:36PM

Unit Parameters

Unit Model: **48HCEG08A2A5-6B1C0**
Unit Size: **08 (7.5 Tons)**
Volts-Phase-Hertz: **208-3-60**
Heating Type: **Gas**
Duct Cfg: **Vertical Supply / Vertical Return**
Medium Heat
Two stage cooling models with MotorMaster Low Ambient Controller

Dimensions (ft. in.) & Weight (lb.) ***

Unit Length: **7' 4.125"**
Unit Width: **4' 11.5"**
Unit Height: **4' 1.375"**
*** Total Operating Weight: **1274** lb

*** Weights and Dimensions are approximate. Weight does not include unit packaging. Approximate dimensions are provided primarily for shipping purposes. For exact dimensions and weights, refer to appropriate product data catalog.

Lines and Filters

Gas Line Size: **3/4**
Condensate Drain Line Size: **3/4**
Return Air Filter Type: **Throwaway**
Return Air Filter Quantity: **4**
Return Air Filter Size: **20 x 20 x 2**

Unit Configuration

Medium Static Option - Belt Drive
Al/Cu - Al/Cu
Electromechanical Controls w/W7220 Econo Controller
Temperature Economizer w/ Barometric Relief
Unpowered Convenience Outlet
Non-Fused Disconnect
Standard Packaging

Warranty Information

1-Year parts
5-Year compressor parts
10-Year heat exchanger - Aluminized

No optional warranties were selected.

NOTE: Please see Warranty Catalog 500-089 for explanation of policies and ordering methods.

Ordering Information

Part Number	Description	Quantity
48HCEG08A2A5-6B1C0	Rooftop Unit	1
	Base Unit	
	Medium Static Option - Belt Drive	
	Unpowered Convenience Outlet	
	Low leak Temp Econo X with baro relief, W7220 control. Meets Calf. Title 24 FDD	
	Non-Fused Disconnect	
Accessories		
CRPWREXH022A01	Power Exhaust System	1
CRRFCURB003A01	14-inch Tall Roof Curb	1

Certified Drawing for RTU-7.5

Project:
Prepared By: Mallory Schaus

04/01/2019
10:36PM

NOTES:

1. DIMENSIONS ARE IN INCHES, DIMENSIONS IN [ ] ARE IN MILLIMETERS.
2. CENTER OF GRAVITY
3. DIRECTION OF AIR FLOW

UNIT	J	K	H
48HC-A,D07	41 1/4 [1048]	33 3/4 [857]	15 7/8 [403]
48HC-D08	49 3/8 [1253]	36 3/8 [925]	15 7/8 [403]
48HC-D09	49 3/8 [1253]	36 3/8 [925]	15 7/8 [403]

Carrier United Technologies
THIS DOCUMENT IS THE PROPERTY OF CARRIER CORPORATION AND IS DELIVERED UPON THE EXPRESS CONDITION THAT THE CONTENTS WILL NOT BE DISCLOSED OR USED WITHOUT CARRIER CORPORATION'S WRITTEN CONSENT.
SUBMISSION OF THESE DRAWINGS OR DOCUMENTS DOES NOT CONSTITUTE PART PERFORMANCE OR ACCEPTANCE OF CONTRACT.

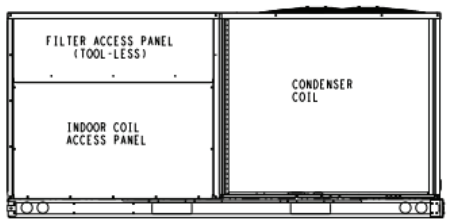

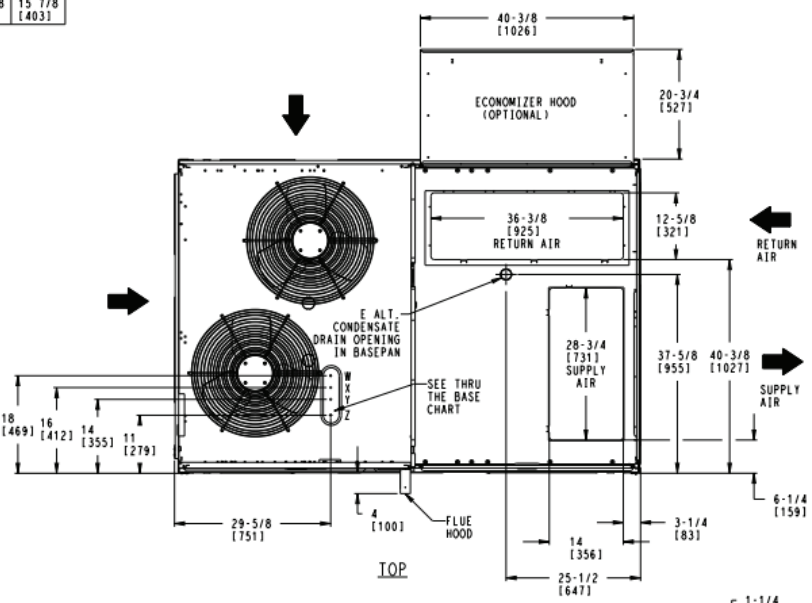

CONNECTION SIZES	
A	1 3/8" [35] DIA FIELD POWER SUPPLY HOLE
B	2 1/2" [64] DIA POWER SUPPLY KNOCKOUT
C	1 3/4" [51] DIA GAUGE ACCESS PLUG
D	7/8" [22] DIA FIELD CONTROL WIRING HOLE
E	3/4"-14 NPT CONDENSATE DRAIN
F	1/2"-14 NPT GAS CONNECTION 3/4"-14 NPT GAS CONNECTION
G	2 " [51] DIA POWER SUPPLY KNOCK-OUT

THRU-THE-BASE CHART (FIELD INST)

THESE HOLES REQUIRED FOR USE WITH ACCY KITS:
CRBTMPWR001A01: 07 - GAS THRU CURB
CRBTMPWR002A01: 08,09 - GAS THRU CURB
CRBTMPWR003A01: 07 - GAS THRU BASEPAN
CRBTMPWR004A01: 08,09 - GAS THRU BASEPAN

	THREADED CONDUIT SIZE	WIRE USE	REQ'D HOLE SIZES (MAX.)
W	1/2"	ACC.	7/8" [22.2]
X	1/2"	24V	7/8" [22.2]
Y	3/4" (001,003) 1 1/4" (002,004)	POWER	1 1/8" [28.6] 1 3/4" [44.4]
Z *	(003) 1/2" FPT (004) 3/4" FPT	GAS	1 1/8" [28.6] 1 3/4" [44.4]
*	(001 & 002) PROVIDES 3/4" FPT THRU CURB FLANGE & FITTING. HOLE SIZE: 2" [50.8]		

THRU-THE-BASE CHART (FIOP)

FOR "THRU-THE-BASEPAN" FACTORY OPTION, FITTINGS FOR ONLY X, Y, & Z ARE PROVIDED. **

**	FOR BELOW LISTED MODELS, A FIELD SUPPLIED 1/2" ADAPTER IS REQUIRED BETWEEN BASE PAN FITTING AND GAS VALVE: 48HCD,E,S,R-07 48HCD,S-08 48HCD,S-09

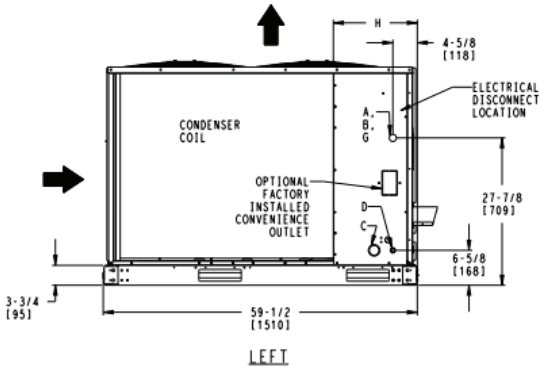

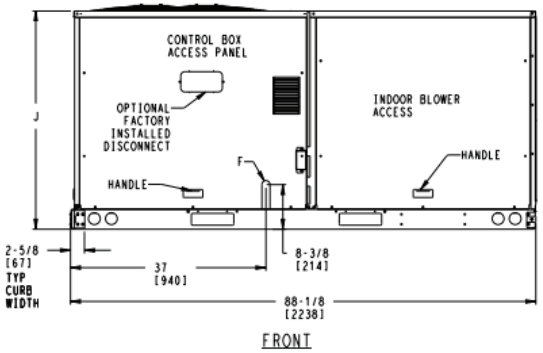

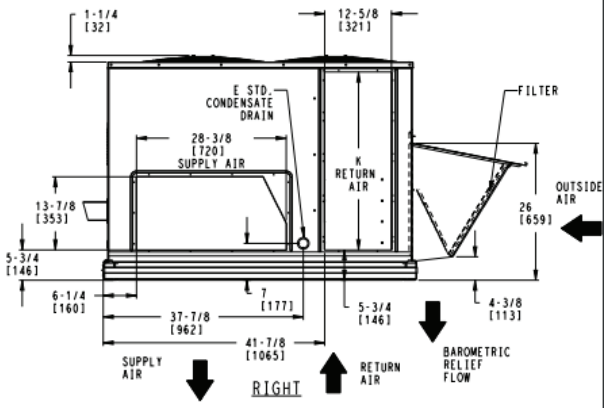

ITC CLASSIFICATION	SHEET	DATE	SUPERCEDES			REV
U.S. ECCN:NSR	1 OF 2	09/28/16	10/05/10	48HC 07 - 09 SINGLE ZONE ELECTRICAL COOLING WITH GAS HEAT	48TM502708	B

Certified Drawing for RTU-7.5

Project:
Prepared By: Mallory Schaus

04/01/2019
10:36PM

UNIT	STD. UNIT WEIGHT *		CORNER WEIGHT (A)		CORNER WEIGHT (B)		CORNER WEIGHT (C)		CORNER WEIGHT (D)		C.G.		
	LBS.	KG.	LBS.	KG.	LBS.	KG.	LBS.	KG.	LBS.	KG.	X	Y	Z
48HC-A,D07	765	347	165.3	75	152.7	69.3	214.7	97.4	232.3	105.4	42 3/8 [1076]	34 3/4 [882.6]	19 7/8 [505]
48HC-D08	925	419.5	204.1	92.6	190.9	86.6	256.1	116.2	273.9	124.2	42 5/8 [1082]	34 1/8 [867]	22 7/8 [581]
48HC-D09	925	419.5	204.1	92.6	190.9	86.6	256.1	116.2	273.9	124.2	42 5/8 [1082]	34 1/8 [867]	22 7/8 [581]

Carrier
THIS DOCUMENT IS THE PROPERTY OF CARRIER CORPORATION AND IS DELIVERED UPON THE EXPRESS CONDITION THAT THE CONTENTS WILL NOT BE DISCLOSED OR USED WITHOUT CARRIER CORPORATION'S WRITTEN CONSENT.
SUBMISSION OF THESE DRAWINGS OR DOCUMENTS DOES NOT CONSTITUTE PART PERFORMANCE OR ACCEPTANCE OF CONTRACT.

* STANDARD UNIT WEIGHT IS WITH LOW GAS HEAT AND WITHOUT PACKAGING.
FOR OTHER OPTIONS AND ACCESSORIES, REFER TO THE PRODUCT DATA CATALOG.

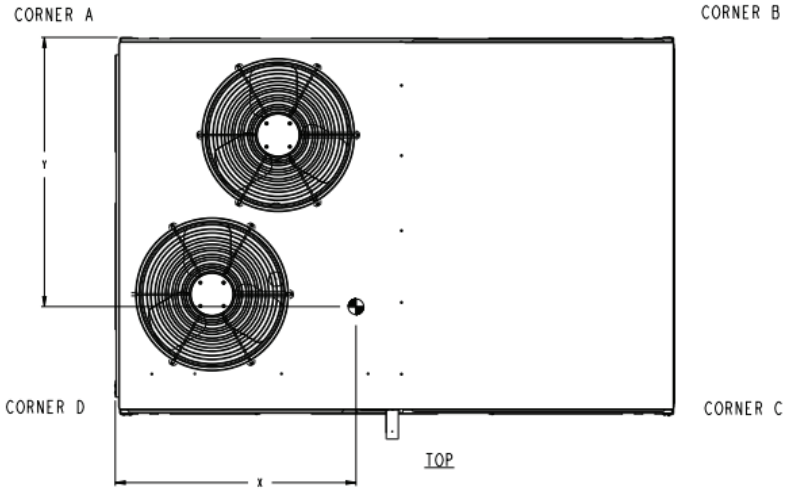

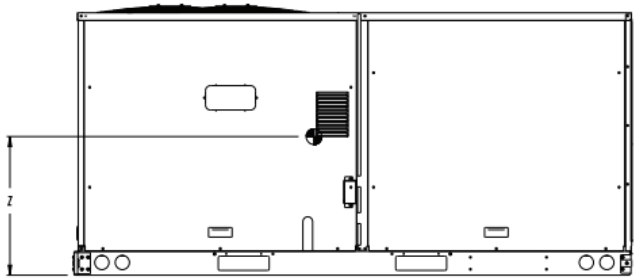

ITC CLASSIFICATION	SHEET	DATE	SUPERCEDES			REV
U.S. ECCN:NSR	2 OF 2	09/28/16	10/05/10	48HC 07 - 09 SINGLE ZONE ELECTRICAL COOLING WITH GAS HEAT	48TM502708	B

Certified Drawing for RTU-7.5

Project:
Prepared By: Mallory Schaus

04/01/2019
10:36PM

Service Clearance

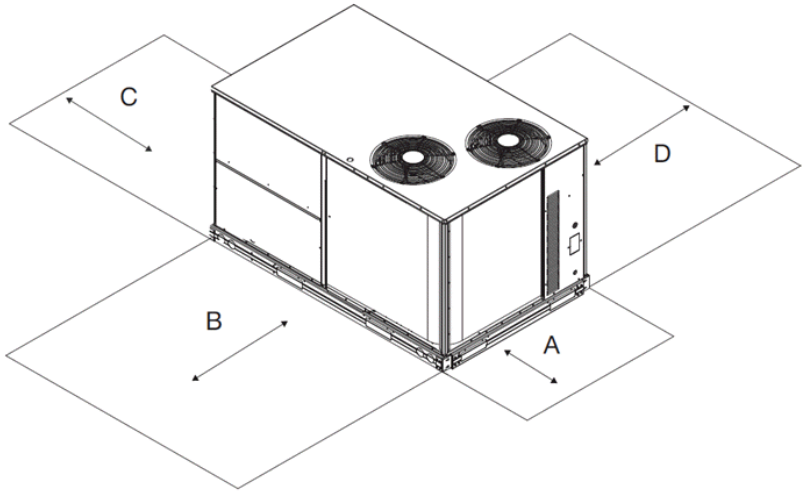

C11247

LOCATION	DIMENSION	CONDITION
A	48-in (1219 mm)	• Unit disconnect is mounted on panel
	36-in (914 mm)	• If dimension-B is 12-in (305 mm)
	18-in (457 mm)	• No disconnect, convenience outlet option • Recommended service clearance (use electric screwdriver)
	12-in (305 mm)	• Minimum clearance (use manual ratchet screwdriver)
B	36-in (914 mm)	• Unit has economizer
	12-in (305 mm)	• If dimension-A is 36-in (914 mm)
	Special	• Check for sources of flue products within 10-ft of unit fresh air intake hood
C	36-in (914 mm)	• Side condensate drain is used
	18-in (457 mm)	• Minimum clearance
D	48-in (1219 mm)	• No flue discharge accessory installed, surface is combustible material
	42-in (1067 mm)	• Surface behind servicer is grounded (e.g., metal, masonry wall, another unit)
	36-in (914 mm)	• Surface behind servicer is electrically non-conductive (e.g., wood, fiberglass)
	Special	• Check for adjacent units or building fresh air intakes within 10-ft of this unit's flue outlet

NOTE: Unit not designed to have overhead obstruction. Contact Application Engineering for guidance on any application planning overhead obstruction or vertical clearances.

Chassis 3-4a

Certified Drawing for RTU-7.5

Project:
Prepared By: Mallory Schaus

04/01/2019
10:36PM

ROOFCURB ACCESSORY#	A
CRRFCURB003A01	14" [356]
CRRFCURB004A01	24" [610]

NOTES:
1.ROOFCURBACCESSORYISSHIPPEDDISASSEMBLED.
2.INSULATEDPANELS:25.4[1"]THKPOLYURETHANEFOAM,44.5[1-3/4#]DENSITY.
3.DIMENSIONSIN[]AREINMILLIMETERS.
4.ROOFCURB:18GAGESTEEL.
5.ATTACHDUCTWORKTOCURB.(FLANGESOFDUCTRESTONCURB).
6.SERVICECLEARANCE4FEETONEACHSIDE
7. [illegible]TIONOFAIRFLOW.
8.CONNECTORPACKAGECRBTMPWR002A01ISFORTHRU-THE-CURBGASTYPE PACKAGECRBTMPWR004A01ISFORTHRU-THE-BOTTOMTYPEGASCONNECTIONS.

CONNECTORPKG.ACC.	GASCONNECTIONTYPE	GASFITTING	POWERWIRING FITTING	CONTROLWIRING FITTING	ACCESSORYCONVENIENCE OUTLETWIRINGCONNECTOR
CRBTMPWR002A01	THRUTHECURB	3/4"[19]NPT	1 1/4"[31.7]NPT	1/2"[12.7]NPT	1/2"[12.7]NPT
CRBTMPWR004A01	THRUTHEBOTTOM				

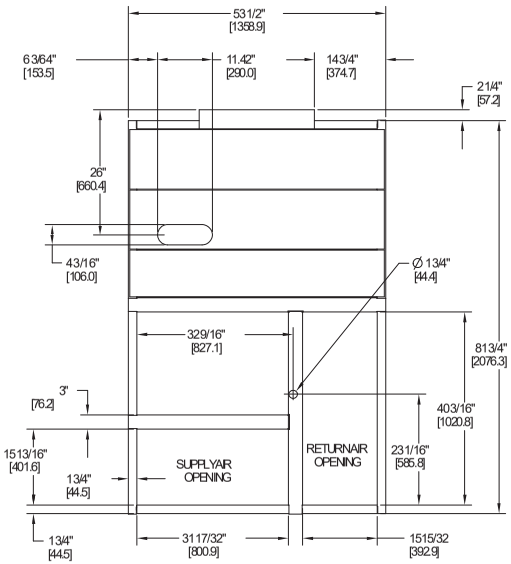

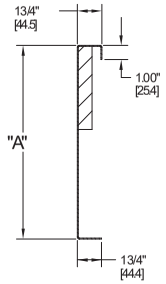

SECTIONTHRUSIDE

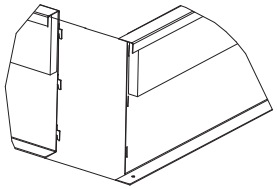

VIEW"B"
CORNERDETAIL

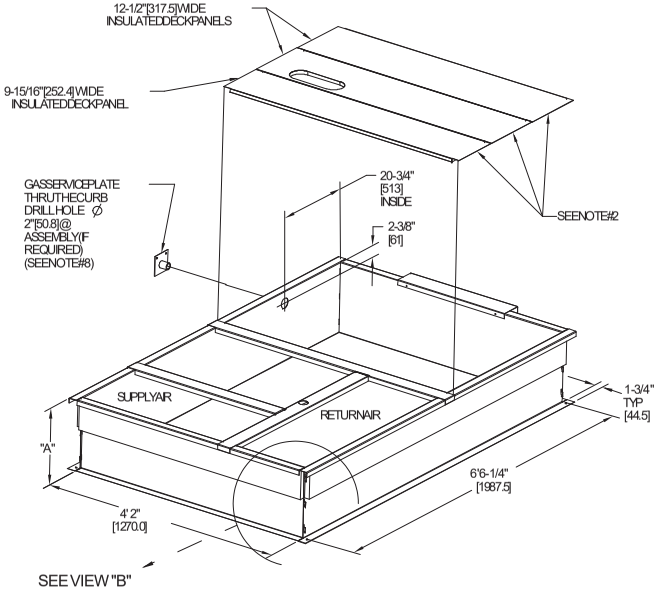

CERTIFIEDDRAWING

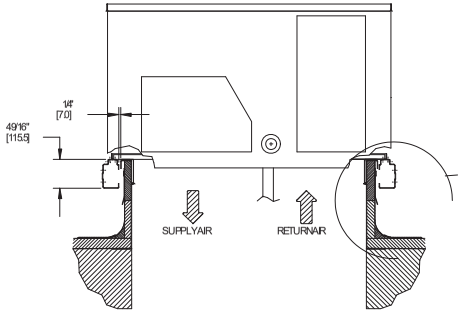

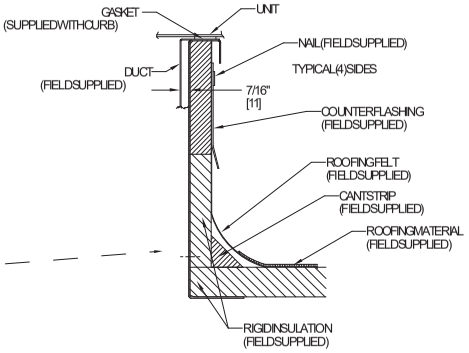

REV	REVISIONRECORD	DATE	BY	CHKD	APP'D	ECNNO.
C	6'6 1/4"WAS6'7 1/6",4'2"WAS4'2 13/16";18GAWAS16GA;15 13/16"WAS15 15/16";NAIL FIELDSUPPLIEDWASWITHCURB	4/22/13	MMC	-	-	1067898

DRAWINGRELEASELEVEL:	PRODUCTION		
THIRDANGLE PROJECTION	UNLESSOTHERWISESPECIFIED DIMENSIONSAREININCHES TOLERANCESON: 1DEC ± - 2DEC ± - 3DEC ± - ANG ± °		THIS DOCUMENT AND THE INFORMATION CONTAINED THEREIN IS PROPRIETARY TO CARRIER CORPORATION AND SHALL NOT BE USED OR DISCLOSED TO OTHERS, IN WHOLE OR IN PART WITHOUT THE WRITTEN AUTHORIZATION OF CARRIER CORPORATION.
MATERIAL - - -	AUTHORIZATIONNUMBER 1029120		TITLE CURBASY,ROOF
ENGINEERINGREQUIREMENTS T-005,Y-002	ENGINEERING - -	MANUFACTURING - -	SIZE D / DRAWINGNUMBER 50HJ405012 SHEET5OF5 / REV C
WEIGHT: -	DRAFTER MMC 12/16/09	CHECKER - -	
SURFACEFINISH - / MFGPURCH PURCH	MODEL (INTERNALUSEONLY)		NEXTDRAWING - / SCALE N/A / DISTRIBUTION -

Performance Summary For RTU-7.5

Project: Prepared By:
Mallory Schaus

04/01/2019
10:36PM

Part Number:48HCEG08A2A5-6B1C0

ARI EER:	**12.00**	
IEER:	**13.0**	
Base Unit Dimensions		
Unit Length:	**88.1**	in
Unit Width:	**59.5**	in
Unit Height:	**49.4**	in
Operating Weight		
Base Unit Weight:	**925**	lb
Medium Heat:	**15**	lb
Two stage cooling models with MotorMaster Low Ambient Controller:	**7**	lb
Medium Static Option - Belt Drive:	**15**	lb
Temperature Economizer w/ Barometric Relief:	**74**	lb
Unpowered Convenience Outlet:	**5**	lb
Non-Fused Disconnect:	**15**	lb
Accessories		
Power Exhaust System:	**75**	lb
14-inch Tall Roof Curb:	**143**	lb
Total Operating Weight:	**1274**	lb
Unit		
Unit Voltage-Phase-Hertz:	**208-3-60**	
Air Discharge:	**Vertical**	
Fan Drive Type:	**Belt**	
Actual Airflow:	**3000**	CFM
Site Altitude:	**0**	ft
Cooling Performance		
Condenser Entering Air DB:	**95.0**	F
Evaporator Entering Air DB:	**80.0**	F
Evaporator Entering Air WB:	**67.0**	F
Entering Air Enthalpy:	**31.44**	BTU/lb
Evaporator Leaving Air DB:	**57.7**	F
Evaporator Leaving Air WB:	**57.2**	F
Evaporator Leaving Air Enthalpy:	**24.53**	BTU/lb
Gross Cooling Capacity:	**93.30**	MBH
Gross Sensible Capacity:	**72.19**	MBH
Compressor Power Input:	**6.24**	kW
Coil Bypass Factor:	**0.198**	
Heating Performance		
Heating Airflow:	**3000**	CFM
Entering Air Temp:	**70.0**	F
Leaving Air Temp:	**115.7**	F
Gas Heating Input Capacity:	**120.0 / 180.0**	MBH
Gas Heating Output Capacity:	**98.0 / 148.0**	MBH
Temperature Rise:	**45.7**	F
Thermal Efficiency (%):	**82.0**	
Supply Fan		
External Static Pressure:	**0.50**	in wg
Options / Accessories Static Pressure		
Economizer:	**0.11**	in wg
Power Exhaust:	**(Fan Data Includes Drop)**	
Total Application Static (ESP + Unit Opts/Acc.):	**0.61**	in wg
Fan RPM:	**759**	
Fan Power:	**1.17**	BHP

Performance Summary For RTU-7.5

Project: Prepared By:
Mallory Schaus

04/01/2019
10:36PM

NOTE: **Selected IFM RPM Range: 690 - 936**

Power Exhaust

Return Duct Static:	**0.20**	in wg
Max. Air To Exhaust:	**3850**	CFM

Electrical Data

Voltage Range:	**187 - 253**
Compressor #1 RLA:	**13.6**
Compressor #1 LRA:	**83**
Compressor #2 RLA:	**13.6**
Compressor #2 LRA:	**83**
Indoor Fan Motor Type:	**MED**
Indoor Fan Motor FLA:	**6.9**
Combustion Fan Motor FLA (ea):	**0.48**
Power Supply MCA:	**45**
Power Supply MOCP (Fuse or HACR):	**50**
Disconnect Size FLA:	**47**
Disconnect Size LRA:	**233**
Electrical Convenience Outlet:	**None**
Power Exhaust [Kit Qty / FLA(ea kit)]:	**1 / 3.8**
Outdoor Fan [Qty / FLA (ea)]:	**2 / 1.5**

Control Panel SCCR: 5kA RMS at Rated Symmetrical Voltage

Acoustics

Sound Power Levels, db re 10E-12 Watts

	Discharge	Inlet	Outdoor
63 Hz	96.6	93.8	90.6
125 Hz	90.7	84.0	84.3
250 Hz	75.1	67.8	80.2
500 Hz	68.9	63.9	79.3
1000 Hz	64.0	61.2	77.1
2000 Hz	62.1	56.3	72.2
4000 Hz	64.8	55.6	67.4
8000 Hz	65.1	55.0	63.7
A-Weighted	77.7	72.1	82.0

Advanced Acoustics

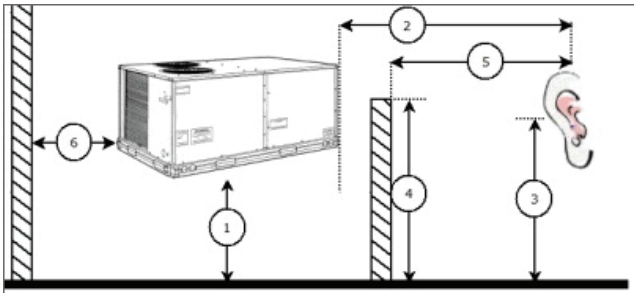

Advanced Accoustics Parameters

1. Unit height above ground:	**30.0**	ft
2. Horizontal distance from unit to receiver:	**50.0**	ft
3. Receiver height above ground:	**5.7**	ft
4. Height of obstruction:	**0.0**	ft
5. Horizontal distance from obstruction to receiver:	**0.0**	ft

Performance Summary For RTU-7.5

Project: Prepared By:
Mallory Schaus

04/01/2019
10:36PM

6. Horizontal distance from unit to obstruction:.....**0.0** ft

Detailed Acoustics Information

Octave Band Center Freq. Hz	63	125	250	500	1k	2k	4k	8k	Overall
A	90.6	84.3	80.2	79.3	77.1	72.2	67.4	63.7	92.3 Lw
B	64.4	68.2	71.6	76.1	77.1	73.4	68.4	62.6	81.7 LwA
C	58.2	51.9	47.8	46.9	44.7	39.8	35.0	31.3	59.9 Lp
D	32.0	35.8	39.2	43.7	44.7	41.0	36.0	30.2	49.3 LpA

Legend
A Sound Power Levels at Unit's Acoustic Center, Lw
B A-Weighted Sound Power Levels at Unit's Acoustic Center, LwA
C Sound Pressure Levels at Specific Distance from Unit, Lp
D A-Weighted Sound Pressure Levels at Specific Distance from Unit, LpA

Calculation methods used in this program are patterned after the ASHRAE Guide; other ASHRAE Publications and the AHRI Acoustical Standards. While a very significant effort has been made to insure the technical accuracy of this program, it is assumed that the user is knowledgeable in the art of system sound estimation and is aware of the tolerances involved in real world acoustical estimation. This program makes certain assumptions as to the dominant sound sources and sound paths which may not always be appropriate to the real system being estimated. Because of this, no assurances can be offered that this software will always generate an accurate sound prediction from user supplied input data. If in doubt about the estimation of expected sound levels in a space, an Acoustical Engineer or a person with sound prediction expertise should be consulted.

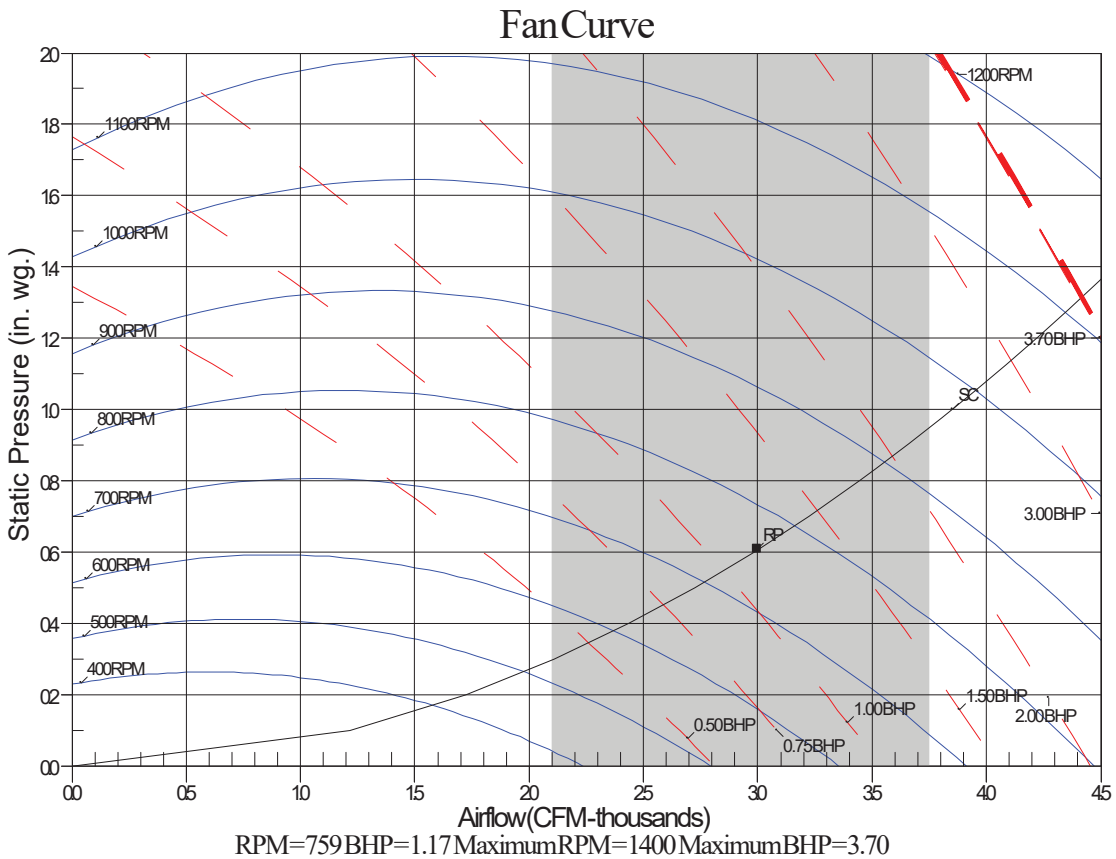

RPM=759 BHP=1.17 Maximum RPM=1400 Maximum BHP=3.70
Note: Please contact application engineering for selections outside the shaded region.
SC-System Curve RP-Rated Point

Document 2

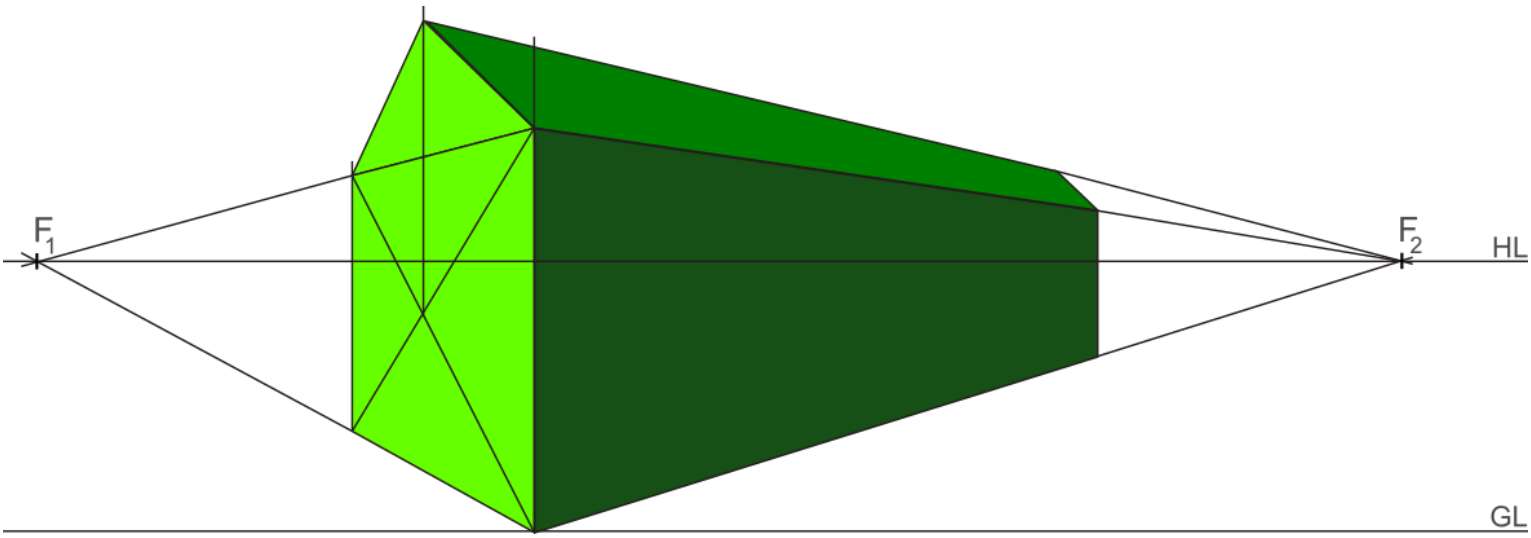

DESIGN GUIDELINES

Village of Lincolnshire

Community & Economic Development
www.lincolnshireil.gov

Approved: November 23, 2015

Document 2

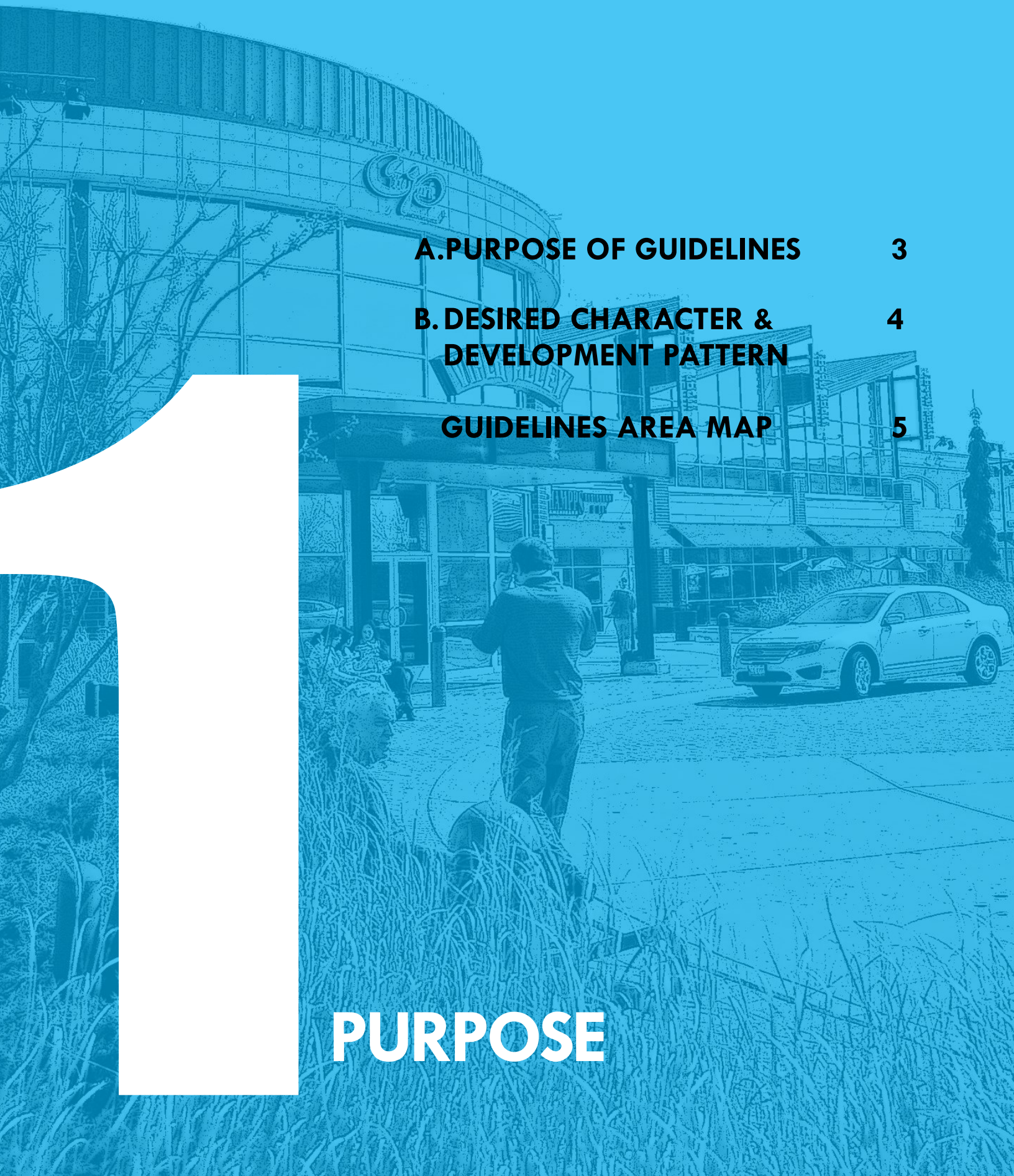

A. PURPOSE OF GUIDELINES 3

B. DESIRED CHARACTER & DEVELOPMENT PATTERN 4

GUIDELINES AREA MAP 5

1 PURPOSE

Document 2

1 A. PURPOSE OF DESIGN GUIDELINES

Since incorporation in 1957, the Village of Lincolnshire has established itself as a community that emphasizes the importance of the built environment through distinctive site design, high-quality architecture, and preservation of the natural environment. This mindset is evident in the original custom-built single-family homes of the Ladd's Lincolnshire Subdivision and continues through every new development proposal requested in Lincolnshire.

The purpose of these Guidelines is to represent the design objectives of the Village for non-residential development along the main commercial corridors within Lincolnshire. These corridors serve as the main thoroughfares throughout the community and are travelled by numerous residents and visitors on a daily basis. As a result, the visual character of Lincolnshire's built environment is "front and center" and sets the tone of the community's identity. While high-level development design is a goal throughout the entire community, these highly-visible corridors are the focus of the Design Guidelines and should exemplify the best in quality design and character.

The Design Guidelines are intended as a tool for use by the Village in evaluating proposed developments and may also be used in the expansion of existing buildings. These guidelines are aimed to convey the main elements of quality site and building design, and should not inhibit architectural creativity or impede the implementation of best practices.

Primary Objectives of Guidelines:

1. Further the vision of the Update 2012 Comprehensive Plan by providing design & aesthetic standards for commercial, mixed-use & office development within the Village's commercial corridors.
2. Create a contextual relationship with the existing Village character, while avoiding repetitive & uninteresting built environments.
3. Establish reasonable expectations regarding architecture & landscape design to strengthen the Village's economic tax base.
4. Create safe & efficient pedestrian & vehicular networks linking developments & public spaces along the Village's commercial corridors.

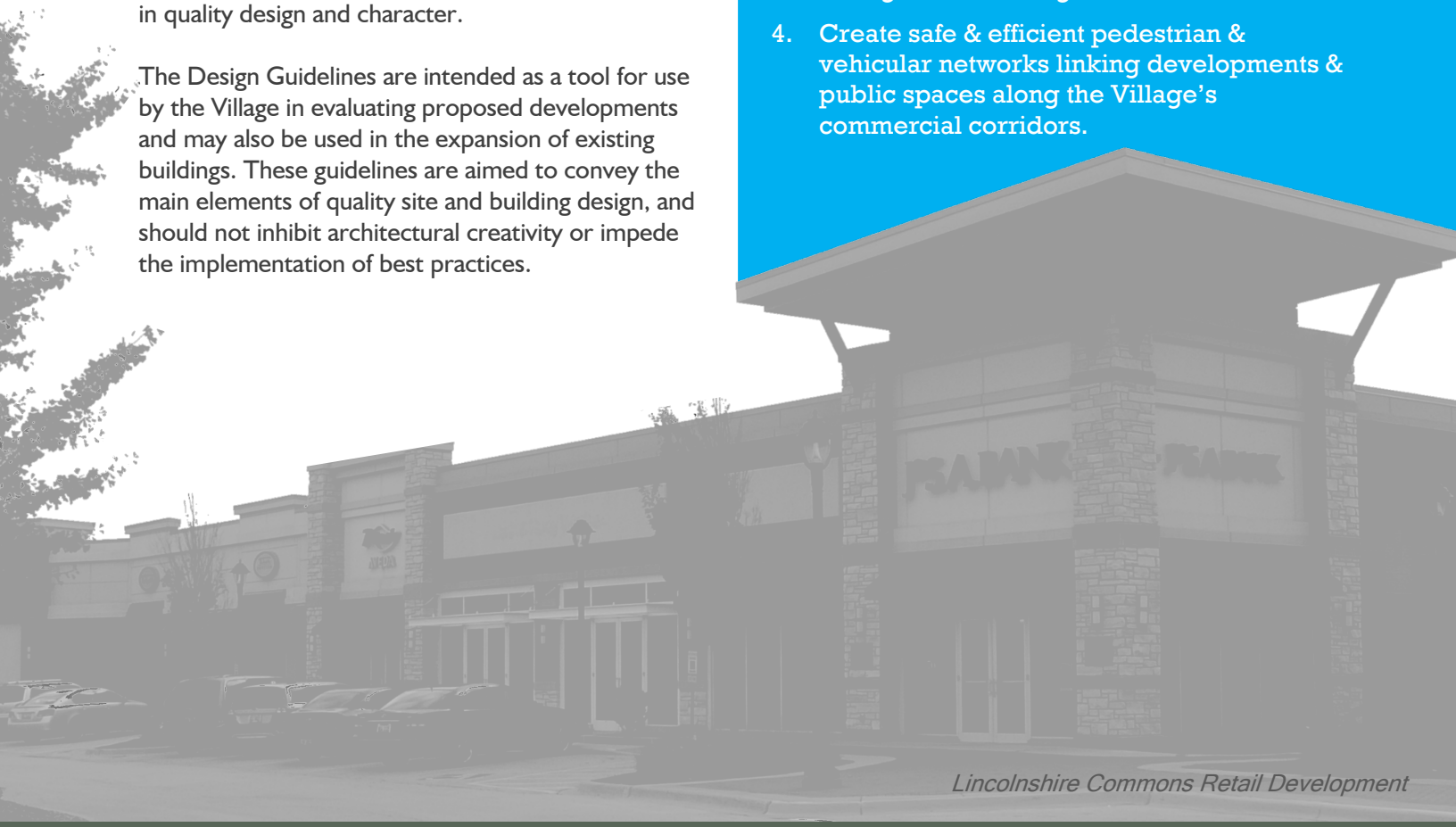

Lincolnshire Commons Retail Development

Document 2

1 B. DESIRED CHARACTER & DEVELOPMENT PATTERN

The highly traveled regional roadways of Milwaukee Avenue, Half Day Road (IL Route 22), Aptakisic Road, and Interstate 94 provide Lincolnshire with the opportunity to reinforce its commitment to quality architecture and design (see Guidelines Area Map on next page).

Development must go beyond the sole inspiration of aesthetics and also enhance Lincolnshire's economic vitality. The Village's expectations must take into account the economic climate and how such expectations effects a business's overall operation. Design and aesthetic recommendations/requirements should not serve as obstructions without due consideration to the economic impacts on the developer/operator. Rather, successful design should achieve a balance of quality architecture appropriate for Lincolnshire while being financially reasonable to the developer/owner.

Application of Design Guidelines:

1. These Guidelines are to be used by Village Staff, the Architectural Review Board and Village Board of Trustees as a reference in reviewing plans and development proposals for new construction and redevelopment of the Village's commercial corridor

2. These Guidelines are also to serve developers, architects, land owners, business owners, etc. as a reference guide of the high quality development sought by the Village of Lincolnshire.

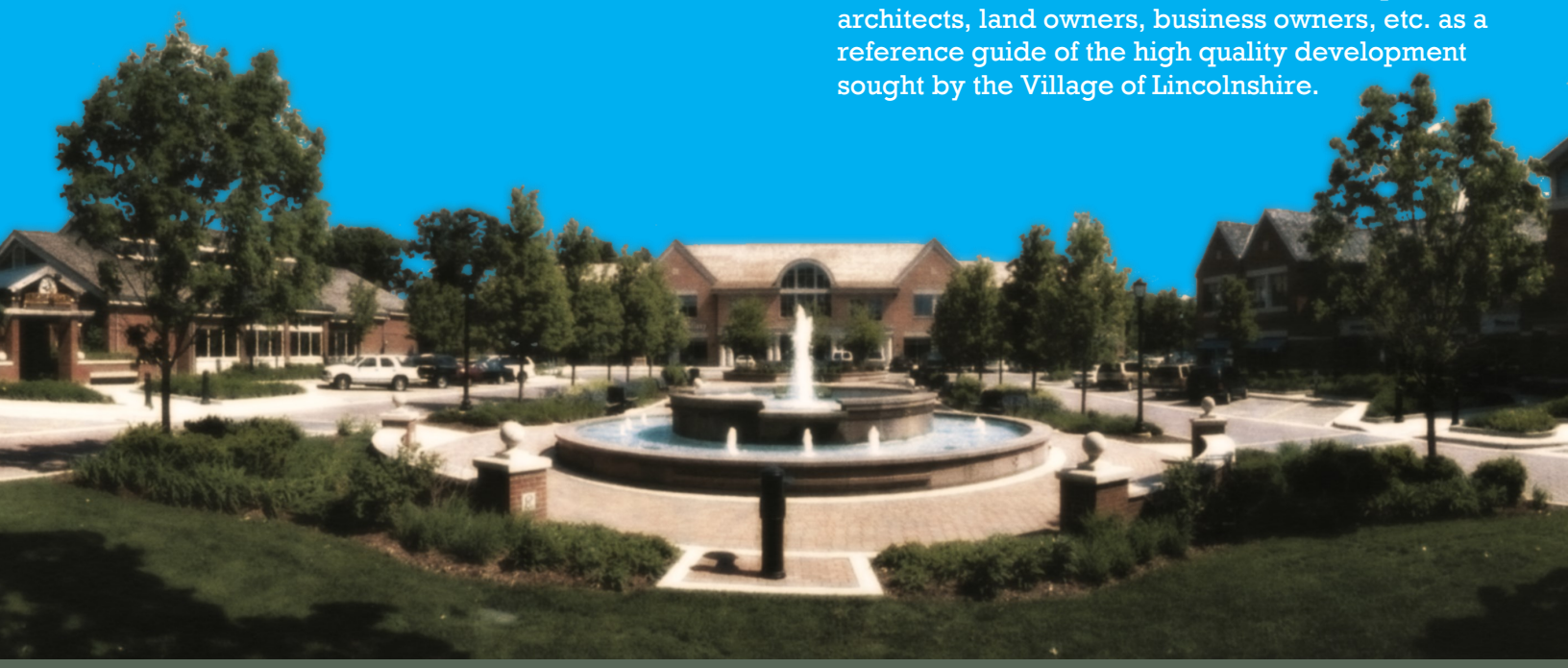

Document 2

Guidelines Area Map

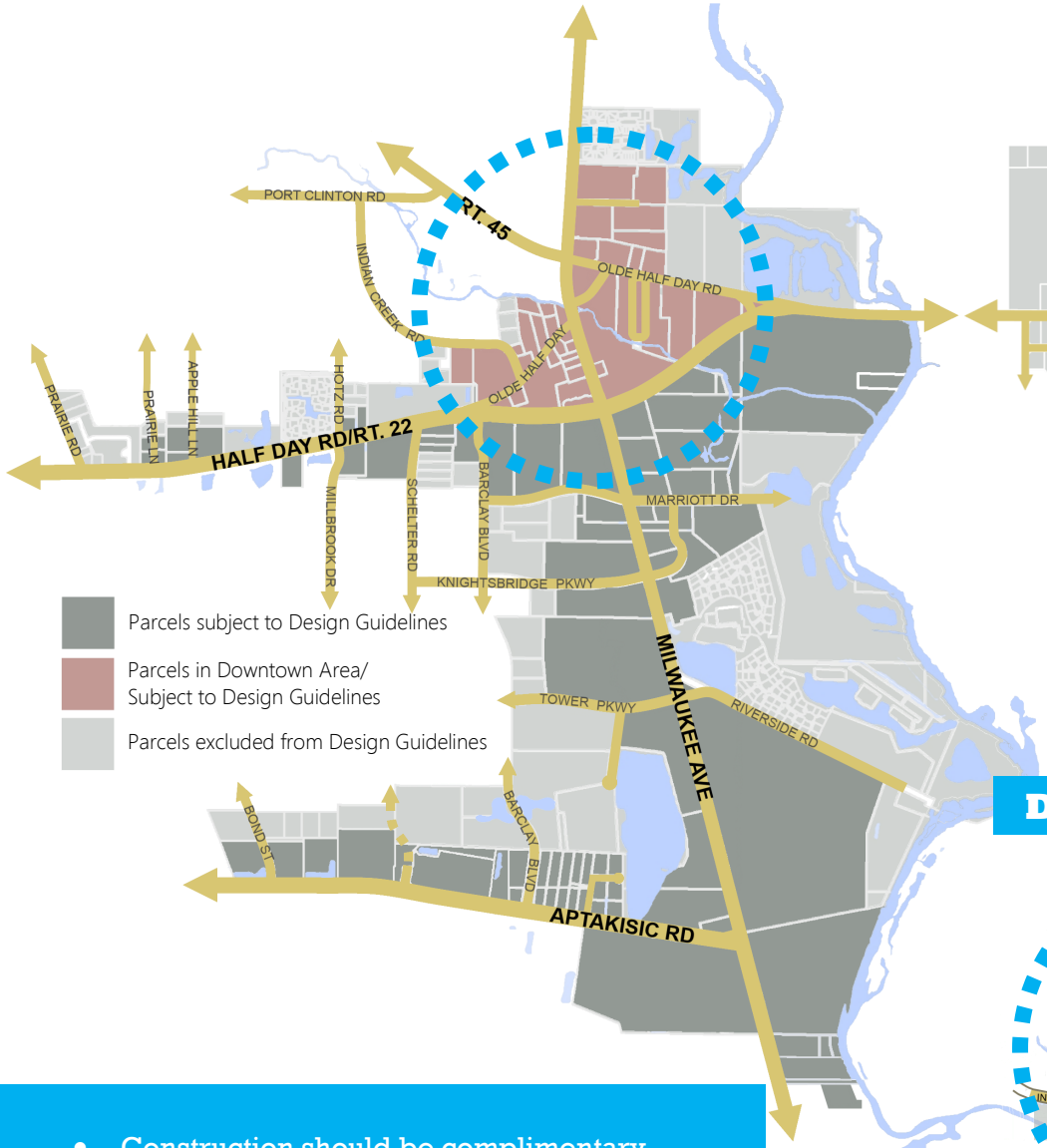

Downtown Area Map

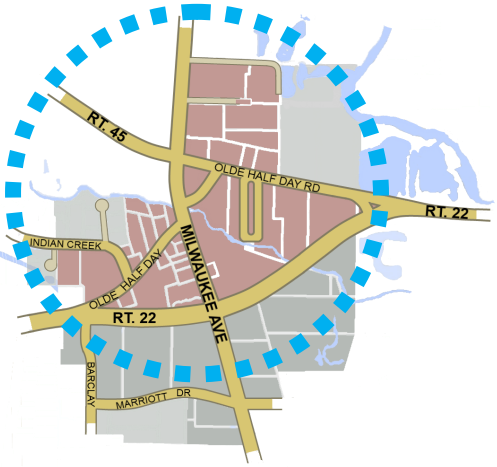

- Construction should be complimentary to the established architectural character, but also establish a unique identity and place.
- Development should consist of exceptional design and quality building materials reflective of the built environment. Where appropriate, the use of quality building materials on every building façade should be accomplished.
- Design recommendations/ requirements should not serve as obstructions without consideration to the economic impacts on the development.

Development in the Downtown Area should have a special focus on the common design elements/ themes that characterize the Downtown area and are encouraged to incorporate such common elements/ themes within the area to establish cohesion, while facilitating architectural creativity.

Document 2

A. PLACEMENT & ORIENTATION 7

B. ARCHITECTURAL CHARACTER 9

C. ARCHITECTURAL ELEMENTS 10

D. BUILDING MATERIALS 11

E. ROOFS 12

F. AWNINGS & CANOPIES 13

G. LIGHTING 13

H. SERVICE & SITE AMENITIES 14

I. LANDSCAPING 15

2 DESIGN GUIDELINES

Document 2

2 A. PLACEMENT AND ORIENTATION

1. Buildings should be oriented towards the street frontage to establish a vibrant street presence. Based on the adjacent buildings/properties, it may be appropriate to position buildings with reduced front setbacks to maintain the existing development pattern. Off-street parking areas do not need to be located entirely behind buildings and hidden from public/street view, but may be distributed to the side and rear of buildings. Positioning entire parking fields in front of a building should be avoided.

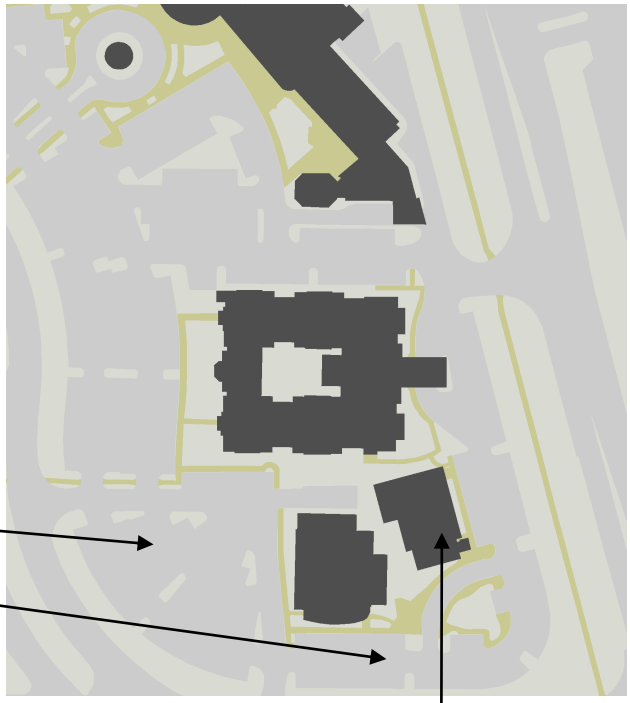

2. Buildings on corner lots should be positioned appropriately to take advantage of the corner street frontage and establish a prominent focal point, both in building location and architectural features. Thoughtful site design to locate main parking fields away from the intersection should be conducted.

3. Vehicle drive-thru facilities, including service windows and access lanes, should be positioned to minimize the visual impact from the street frontage to the greatest extent possible. Creative site design techniques, such as detached drive-thru facilities or integration of the drive-thru facility into the site/ building design to conceal the facility may be appropriate.

Document 2

2 A. PLACEMENT AND ORIENTATION (cont.)

4. Parking areas should be designed to provide safe and logical navigation throughout the site/development. When possible, sidewalk connectors from the parking lot to the building pad should be provided to minimize pedestrians having to walk within vehicle drive aisles. Vehicular ingress and egress to a site should focus on maximizing vehicle stacking opportunities so there is minimal impact on internal circulation and parking.

5. Parking spaces immediately adjacent to a building should be separated with adequate foundation landscape planting areas to establish a refined transition between parking areas and the building. For parking spaces fronting a curb line, the parking space length can be shortened by 2 feet where a vehicle overhang can be provided. Parking spaces where vehicle overhang is adjacent to a sidewalk, the sidewalk width should be increased to 7 feet to provide sufficient/unobstructed pedestrian access.

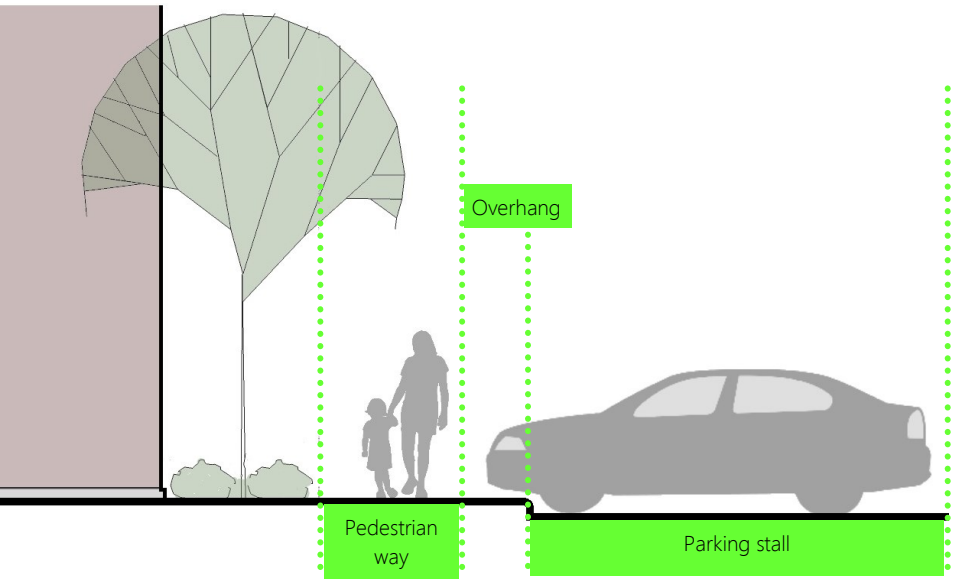

Document 2

2 B. ARCHITECTURAL CHARACTER

Having been established in 1957, through the original "Ladd's" Lincolnshire subdivision, the Village's architectural style is indicative of the post-War era. The Village isn't defined by one dominant style - Postmodern influences, mixed with regional Prairie-style elements, and combined with Traditional themes - are a few examples of the varying architectural style within Lincolnshire.

- Lincolnshire's non-residential buildings are strongly influenced by the use of high-quality materials such as brick, stone, limestone, and cedar shake roof shingles. Building detailing plays a contributing role in enhancing the atheistic character and is as fundamental as the building's design or use of materials.

- New construction and redevelopment should be mindful of the existing architectural context, but should establish its own unique identity and place within Lincolnshire to avoid producing undistinguishable environments.

Document 2

2 C. ARCHITECTURAL ELEMENTS

1. One-story commercial buildings should have their height accentuated through varied roof heights or architectural tower elements to provide presence.

2. Tower elements are encouraged and should be incorporated into the building design, where appropriate. Roof and building façade materials for such elements can incorporate distinctive materials separate from the main building field, but should be complementary to the overall building design and scale.

3. Buildings should incorporate a three-component façade design, including:

1) Base element (through materials and design),

2) A main building field, and

3) Varied roofline.

Document 2

2 D. BUILDING MATERIALS

Beyond architectural style, a key element of a building's identity is the application of quality exterior materials. A variety of materials, such as stone, brick, granite, steel, wood, etc, is encouraged to create an enduring appearance.

1. Exterior materials should be coordinated with adjacent buildings to establish a harmonious character. However, repetitive use of like materials and colors can create a monotonous environment which could lead to a lack of identity amongst developments/buildings.

2. Synthetic materials such as Exterior Insulation and Finishing Systems (EIFS) and Dryvit® should not be used as the principal building material, but can be an acceptable application for secondary accent elements and features. However, materials such as cement fiber siding ("hardiboard") and composite roofing shingles that give the impression of natural materials can be an acceptable substitute for primary exterior building materials.

3. Rooftop equipment screens, rain gutters, downspouts, exhaust vent/screens, and similar ancillary components should coordinate with the building colors to appear as unobtrusive as possible.

4. To achieve a strong architectural setting, it is essential building façades be well articulated, with special attention to street-facing façades. Multiple building façades visible from the public way, parking lots, etc. must also display equal attention to detail and design as the primary façade, in which the material palette should be carried through on all visible façades of the building.

5. Blank walls facing public ways are highly discouraged and should incorporate architectural detailing and ornamentation even if not a customer entry. False storefronts or other detailing that gives the impression of an active elevation should be utilized.

6. Architectural detailing and ornamentation (e.g., windows, cornices, lintels, medallions, columns, etc.) are encouraged to provide visual interest.

Document 2

2 E. ROOFS

1. Roof styles must be compatible with the building's architectural design character.
2. Roof design elements (e.g., dormers, "eyelids", etc.) are encouraged to break up long roof sections. However, use of such elements should be implemented consciously so that elements do not appear forced.
3. Roof materials should consist of slate shingles, architectural-grade asphalt shingles, or synthetic shingles which give the appearance of slate, cedar or natural materials. Cedar shake roofing shingles are also acceptable; however, the long term maintenance and associated costs may not outweigh the visual appeal of such material. Roof materials for tower elements can incorporate distinctive materials separate from the main roof, such as standing seam metal, but should be complementary to the overall roof design.
4. Roofs should be designed to permit rooftop-mounted mechanical equipment to be placed within a well or behind parapet walls to be screened from surrounding properties.
5. Roof heights should be varied, where appropriate.

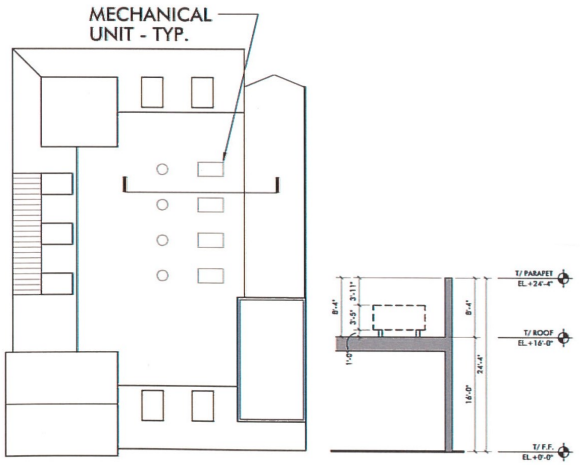

Parapet Roof Screen

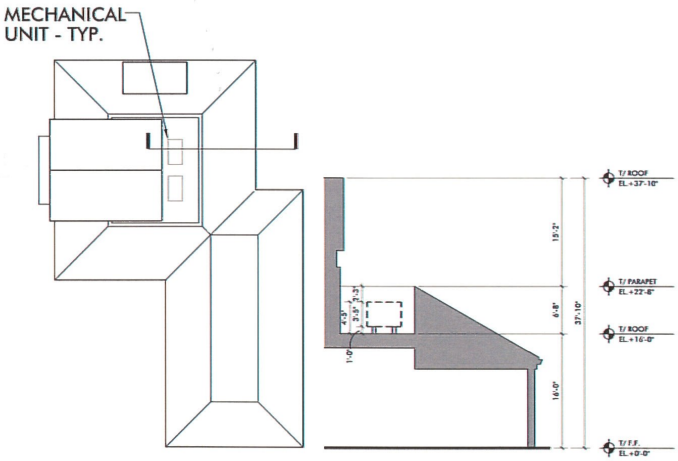

Roof Well Screen

© A. Epstein and Sons, Int'l

Document 2

2

F. AWNINGS & CANOPIES

1. Awnings and canopies should be an integral architectural feature of the building design, tailored to the façade of the building and positioned so that distinctive architectural features remain visible.

2. Materials should consist of noncombustible, non-reflective canvas or canvas-like material. Metal awnings and canopies can be appropriate based on compatibility with specific building architectural style.

3. Colors and patterns of awnings need not match the overall color scheme of the building to which they are attached, but should complement the building design.

G. LIGHTING

1. Site lighting should reflect the architectural tone of the development and maintain a compatible style/design throughout.

2. Building illumination should extend beyond aesthetics and serve a functional purpose for safety. Architectural building elements and ornamentation can be highlighted through the use of thematic lighting, but should be carried out tastefully.

3. Pedestrian-oriented lighting fixtures and bollard lighting should be included in the site development.

Document 2

2

H. SERVICE & SITE AMENITIES

1. Site amenities such as flower baskets, sculptures, water fountains, children's play areas, etc., are encouraged to introduce a sense of place and character to developments.

2. Site furniture (e.g., benches, trash containers, drinking fountains, bike racks/stations, etc.) locations must be strategically positioned to be functional. Materials should be weather-resistant to reduce wear and tear.

3. Trash enclosures and service areas need to be concealed with a solid enclosure constructed of consistent building materials and colors to blend with the surroundings. For those portions of the enclosure which are open to public view, landscaping to soften the visual effect of enclosures and service areas is necessary.

4. Every effort should be taken to locate service areas in the rear of the site/building layout and limit visibility from street frontages.

Document 2

2

I. LANDSCAPING

The manner in which commercial buildings are landscaped reflects strongly on the Village's image and commitment to the natural environment. As a result, the landscaping expectations for commercial developments is to achieve and maintain sustainable and functional landscapes, which emphasize the use of plants native to the region and to provide vegetation color and interest throughout the entire year.

1. Landscaping should be comprehensive to serve the individual building/site and also complement the surrounding landscape character. The use of evergreen trees and shrubs is encouraged to offer color and texture during winter seasons. Although it is routine practice to encourage dense landscaping and tree clusters along the street frontage to visually obscure commercial buildings, site landscaping should be implemented to contribute in creating a sense of place, not as a visual blocking tool obscuring commercial buildings.
2. Non-linear arrangement of landscape beds is preferred and should contain a variety of landscape species to present a diverse palate of height, color and texture. Plantings should also be selected to take advantage of the region's seasonal schedule to provide a range of color and texture throughout the year.
3. To the greatest extent possible, native plantings should be incorporated into the landscape design.
4. A "soldier-course" of landscape plantings should generally be avoided.
5. Screening of equipment should be accomplished through plantings that work into the natural rhythm of the landscape design, rather than introducing an evergreen "soldier-course" of material not present elsewhere on the site.
6. Stormwater detention basins often occupy a significant amount of open space and can be located in high-profile areas of a site. It is important detention areas are visually appealing and should be designed in a non-uniform shape. Expanses of linear shoreline should be reduced in favor of a gradually undulating perimeter, creating a more natural appearance, rather than engineered. Shorelines should be properly sloped to prevent erosion and facilitate native plantings.

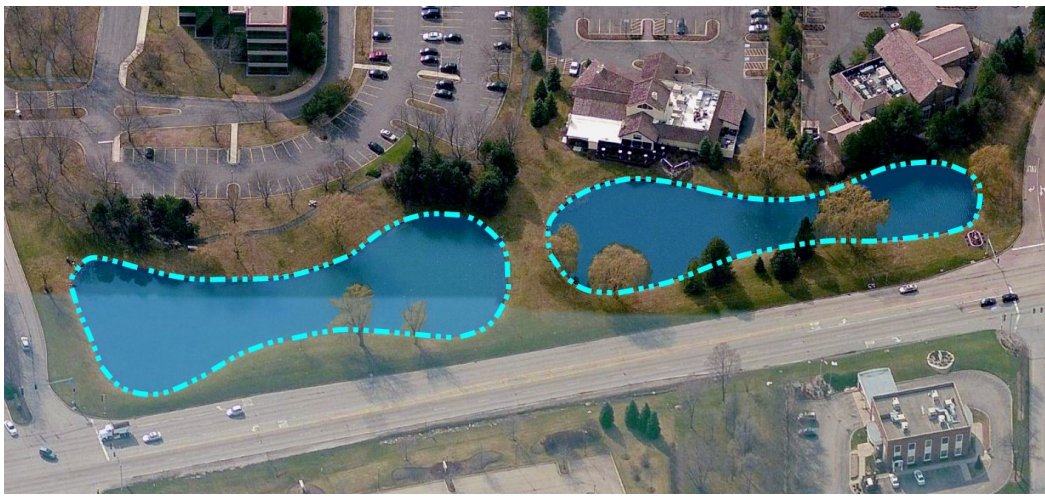

Document 3

Village of Lincolnshire

Agenda Item
3.3 ARB

REQUEST FOR BOARD ACTION
Architectural Review Board
July 16, 2019

Subject:	New Medical Office Building – 231 Olde Half Day Road
Action Requested:	Consideration and Discussion of Site Design, Building Elevations, Landscape Plans, Exterior Lighting, Parking, and Exterior Signage for a Proposed New Medical Office Building
Petitioners:	Alexander and Julia Katsnelson
Originated By/Contact:	Ben Gilbertson, Assistant Village Manager/CED Director
Advisory Board Review:	Architectural Review Board

Background:

Figure 1: Location Map

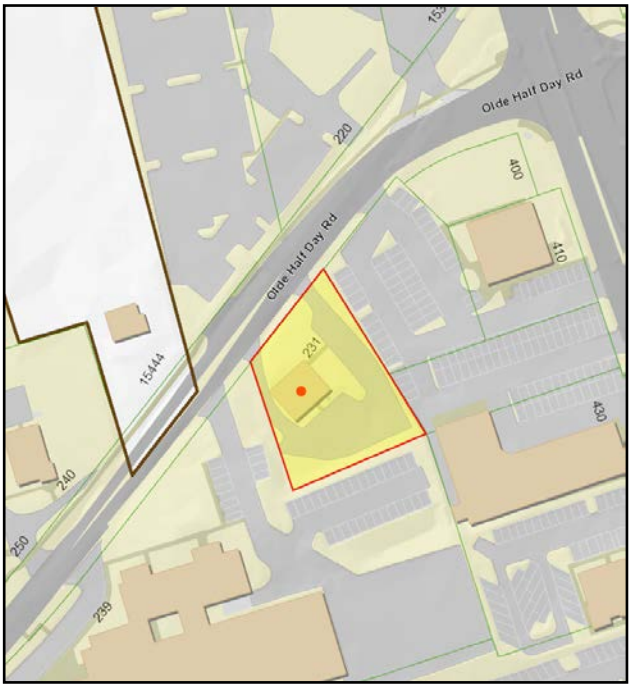

- Petitioners Alexander and Julia Katsnelson request the Architectural Review Board's (ARB) consideration of a proposed new medical office to establish dermatology and oral, maxillofacial, and surgery practices at 231 Olde Half Day Road in the B1 zoning district. The proposal is supported and has been approved by property owner, Njb Real Estate LLC.

- At the January 12, 2019 Committee of the Whole meeting, the petitioners requested a preliminary evaluation of a proposed text amendment to the Lincolnshire Village Code (code) to eliminate the existing 25% ground floor sales tax-generating use restriction in the B1 and B2 Business zoning districts. The text amendment was necessary for them to establish the medical office building on the subject property. The Zoning Board and the Village Board subsequently – and unanimously – approved this text amendment at their June 25, 2019 and July 8, 2019 meetings, respectively.

- On March 18, 2019, the petitioners requested a second Preliminary Evaluation for review of the site plan and building elevations. The Village Board referred this request to the Architectural Review Board (ARB). Pending the ARB's recommendation, the Village Board has the authority to approve new construction.

- The 0.5-acre property is located south of Olde Half Day Road and west of Milwaukee Avenue, as marked with a red dot in Figure 1 (see Document 1). It is adjacent to the Oak Tree Corners Center and Half Day Elementary School.

- The petitioners plan to acquire the property, demolish the existing two-story, 4,572-square-foot vacant building and construct a new one-story, 5,405-square-foot medical office building. The existing building was constructed in 1963 and most recently housed NJB Operations/Taco Bell Corporation offices, but became vacant two years ago.

- Adjacent uses and zoning classifications include:
  - To the north: a vacant commercial site (zoned B1)
  - To the south and west: Half Day School (zoned B1 with a Special Use permit)
  - To the east: Oak Tree Corners shopping center (zoned B1)

Proposal Summary & Staff Comments:

Building Design and Materials
The petitioner's cover letter states the goal of the proposed building is to blend and highlight the architectural features of the downtown Lincolnshire area while also introducing unique features. The building design includes a mix of contemporary and traditional architectural elements with the use of natural materials. The petitioner evaluated buildings throughout Lincolnshire to draw inspiration from, as well as complement the design of, adjacent of properties in line with the Lincolnshire Design Guidelines and specifications for the Downtown Area.

The petitioner's building elevations show a composition of stone, brick, stucco, and glass. A 20'-6" curved roof is also proposed, which is below the 30' maximum building height requirement for the B1 zoning district. Metal awnings are incorporated into the design, as are decorative shingles along the curved roof above the main entrance. The majority of the building will be 16' tall (with the exception the curved roof).

Rooftop equipment will be screened with a 4'-tall parapet wall around the entirety of the building. The trash enclosure is proposed to be screened from view with 6'-tall screen wall consisting of treated wood planks, painted brown.

Off-Street Parking Requirements and Site Access
Section 6-11 of the Village code requires physician's offices to provide parking spaces based on the following equation:

1/employee + 2/examination room

The petitioner has indicated no more than 9 employees will be on-site at given time. Additionally, the petitioner will provide 10 exam rooms in the new building. Using the previous equation, 29 parking spaces are required. The petitioner is proposing 30 spaces. Presently, the property has two access points off of Olde Half Day Road. The proposed plan consolidates access to a single point of ingress and egress.

Signage
Signage on this property is subject to the requirements of the Commercial Sign District. A 7'-6"-tall by 9'-wide, double-sided ground monument sign is proposed. Because the petitioners

propose to operate two separate practices within the same building (i.e., multi-tenant), they are permitted slightly larger dimensions than a single-tenant building sign. The sign features a base / sign area / cap design, and is comprised of stone and brick with aluminum lettering. Illumination is provided via ground lighting. All features of the sign, in addition to the landscaping at its base, conform to Village code.

Landscaping and Tree Removals

Given the footprint of the new construction, a number of new tree plantings and tree removals are proposed. The landscape plan shows 21 deciduous and evergreen trees will be planted, totaling 57". These plantings include three Appendix A trees, totaling 11" (Green Mountain Sugar Maple, Skyline Thornless Honeylocust, and Swamp White Oak) and 18 non-Appendix A trees total 46" (mixture of deciduous and evergreen trees. The petitioners' site plan also indicates protection of an existing 46" Silver Maple at the southern end of the property with pervious pavement surrounding the base.

According to the tree survey performed by a certified arborist, three are Appendix A trees totaling 68 caliper inches are scheduled for removal, all of which are in "Good" or "Very Good" condition. Only one other non-Appendix A tree to be removed is in "Good" or "Very Good" condition, totaling 28 caliper inches. The remaining trees to be removed are in either "Below Average" or "Poor" condition. Trees that are unhealthy, dead, or dying are not required to be replaced per Ordinance #18-3787-215, which temporarily suspends tree replacement requirements for commercial properties until December 31, 2020.

	Appendix A Trees		**Non-Appendix A Trees**		**All Trees**	
	Number	***Inches***	***Number***	***Inches***	***Number***	***Inches***
To be Planted	3	11"	18	46"	21	57"
To be Removed	3	68"	15	261" *	18	329"

*Only 28" of the 261" non-Appendix A trees to be removed represent trees in "Good" or "Very Good" condition

Exterior Lighting

The property will be lit by three 20'-tall light poles with two mounted decorative scones on the building façade. The proposed light pole height and lighting levels meet code requirements.

Stormwater Detention

The petitioners are working with Lake County Stormwater Management Commission (SMC) to determine if on-site stormwater improvements are needed. If the petition receives final approval from the Village Board, SMC's approval is required before any construction or building permits are issued.

Approval Process

1. Preliminary Evaluation at the Village Board. **COMPLETED**
2. The Zoning Board will hold a public hearing on the text amendment request. **COMPLETED**
3. The Village Board will consider the Zoning Board's recommendation on the text amendment and make a final determination. **COMPLETED**
4. The ARB will review the site and building design, landscaping, signage, lighting, and site amenities. **CURRENT STAGE OF APPROVAL**
5. The Village Board will consider the ARB's recommendations regarding site and building design, landscaping, signage, lighting, and site amenities and make a final determination on the new construction. **TO BE HELD AT A FUTURE DATE**

Village of Lincolnshire

Agenda Item
3.3 ARB

Recommendation:
Staff recommends the ARB determine whether all of the above ARB requests have been satisfactorily addressed prior to making a recommendation to the Village Board.

Motion:
The Architectural Review Board moves to recommend approval to the Village Board the proposed development plans depicting site design, building elevations, parking, landscaping, exterior lighting, exterior signage, and site amenities for a proposed new medical office building, located at 231 Olde Half Day Road, as presented in the petitioner's presentation packet, date stamp received July 11, 2019, and as depicted in the material/color sample board provided at the July 16, 2019 Architectural Review Board meeting, and further subject to…

[Insert any additional conditions or modifications]

Reports and Documents Attached:
- Document 1: Cover letter prepared by Alexander and Julia Katsnelson dated July 10, 2019.
- Document 2: Planning and Zoning Application, dated July 10, 2019.
- Document 3: Presentation packet, prepared by Alexander and Julia Katsnelson Sara E.F. Gensburg, Ltd., date stamped received July 11, 2019.
- Document 4: Lincolnshire Downtown Design Guidelines, approved November 23, 2015.
- Document 5: Minutes from the March 18, 2019 Committee of the Whole meeting.

Meeting History	
Committee of the Whole – Preliminary Evaluation (Text Amendment)	January 14, 2019
Committee of the Whole – Preliminary Evaluation (Site Plan and Building Elevations)	March 18, 2019
Zoning Board – Public Hearing (Text Amendment)	June 25, 2019
Regular Village Board – Text Amendment Approval	July 8, 2019
Architectural Review Board – Site Design Consideration and Discussion	July 16, 2019

Village of Lincolnshire

Agenda Item
3.2 ARB

REQUEST FOR BOARD ACTION
Architectural Review Board
August 20, 2019

Subject:	Adlai E. Stevenson High School - 1 Stevenson Drive & 16139 Port Clinton Road
Action Requested:	Approval of a Minor Amendment to a Special Use to Permit a Hall of Fame and Pergola
Petitioner:	Adlai E. Stevenson High School District 125
Originated By/Contact:	Tonya Zozulya, Planning & Development Manager
Advisory Board Review:	Architectural Review Board

Background:

- Adlai E. Stevenson High School District 125 (Stevenson), seeks Architectural Review Board (ARB) approval of a Hall of Fame project near the school stadium at 1 Stevenson Drive and a pergola near Stevenson's Transition House at 16139 Port Clinton Road, as shown with red dots on Figure 1 and attached location map.

Figure 1: Location Map

- The 76.6-acre Adlai E. Stevenson High School property was developed in 1963 in unincorporated Lake County and annexed into the Village in two phases in 1981 and 1992. It received Special Use and R1 zoning approvals in 1992 by Ordinance #92-1226-04. In 2017, the residential property at 16139 W. Port Clinton Road was annexed to the Village for school use as a Transition House and is covered by the Special Use Ordinance.

- Over 10 building additions have occurred since the school was originally constructed. The most recent 56,800-square-foot addition was approved as a Major Amendment to the Special Use by the Village in 2017 to accommodate a projected enrollment growth to over 4,500 students by 2024 (Ordinance #17-3745-173).

- In February 2019, the ARB reviewed and approved a minor amendment to the Special Use for construction of a 100-stall parking lot over inactive tennis courts along the east side of the property.

Project Overview & Staff Comments:

Hall of Fame

- The proposed Hall of Fame project, located south of the southwest entrance to the stadium, is designed to recognize and honor Stevenson's athletes. It consists of a pergola, columns, seat walls, brick pavers, landscape planters as well as a display wall and an identification sign (see attached Document 2).

- The area is currently improved with grass. No tree removals are required for this project.

- The wooden pergola with brick bases is proposed to be 13' tall (2' less than the maximum code-permitted height) and located outside required setbacks.

- The proposed double-face identification wall sign, which states "Stevenson High School Hall of Fame," is to be installed on a wooden wall featuring plaques. The proposed wall sign dimensions are summarized below:

	Max/Proposed Sign Area	Max/Proposed Length	Max/Proposed Letter Height	Max/Proposed Face Height
Code	10% of wall area or 24 sq.ft., whichever is less	8'	12"	2'
Proposed	12 sq.ft.	7'-6"	11 3/8"	1'-8"

The petitioner indicated the wall sign will be internally lit during scheduled events only and will not shine into adjacent residential homes to the west. The proposed sign lettering, illumination, and dimensions meet code.

Pergola

- The petitioner is also requesting the ARB's reaffirmation of the 10' tall wooden pergola installed in the back of the Transition House at 16139 Port Clinton Road for educational purposes (see attached Document 2). Stevenson was unaware this type of exterior improvement required ARB review and installed the pergola prior to seeking and obtaining Village approvals.

Approval Process:
The Architectural Review Board has the final authority to review and approve these two projects as a minor amendment to Stevenson's Special Use permit.

Recommendation:
Staff recommends approval of the stadium Hall of Fame and Transition House pergola with the following condition:

1. The Hall of Fame wall sign shall only be lit during scheduled events at the school stadium.

Hall of Fame Motion:
The Architectural Review Board moves to approve a minor amendment to the existing Special Use to permit the Hall of Fame project for the Adlai E. Stevenson High School, located at 1 Stevenson Drive, as presented in the packet submitted by Adlai E. Stevenson High School District 125, date stamped received August 12, 2019, and further subject to. . .

{Insert any additional conditions or modification desired by the Architectural Review Board}

Pergola Motion:
The Architectural Review Board moves to approve a minor amendment to the existing Special Use to permit the pergola for the Adlai E. Stevenson High School Transition House, located at 16139 Port Clinton Road, as presented in the packet submitted by Adlai E. Stevenson High School District 125, date stamped received August 12, 2019, and further subject to. . .

{Insert any additional conditions or modification desired by the Architectural Review Board}

Reports and Documents Attached:
- Document 1: Location Map.
- Document 2: Petitioner's cover letter and presentation packet, prepared by Adlai E. Stevenson High School, date stamped received August 12, 2019.

Meeting History	
Architectural Review Board (current):	August 20, 2019

DOCUMENT 1

GIS consortium MapOffice™

Stevenson High School

Map created on August 13, 2019.

© 2019 GIS Consortium and MGP Inc. All Rights Reserved.
The GIS Consortium and MGP Inc. are not liable for any use, misuse, modification or disclosure of any map provided under applicable law.
Disclaimer: This map is for general information purposes only. Although the information is believed to be generally accurate, errors may exist and the user should independently conf for accuracy. The map does not constitute a regulatory determination and is not a base for engineering design. A Registered Land Surveyor should be consulted to determine precise location boundaries on the ground.

DOCUMENT 2

STEVENSON HIGH SCHOOL DISTRICT 125

Hall of Fame Project

August 20, 2019

Cherise Kennerley and Members of the Architectural Review Board
Village of Lincolnshire
One Olde Half Day Road
Lincolnshire, IL 60069

RE: Hall of Fame Proposal

Dear Chairman Cherise Kennerley and Members of the Architectural Review Board,

Adlai E. Stevenson High School – District 125 is an established and respected institution in the Village of Lincolnshire and has served the community as one of the most highly recognized secondary education organizations in the nation. Under current zoning ordinances, Stevenson High School is zoned under a special use permit within an R1 residential district. Per Village Code, we are requesting a minor amendment approval from the Village of Lincolnshire to construct a Hall of Fame.

The Hall of Fame is designed to showcase our exceptional student athletes in a space outside of the Southwest entrance to our stadium. This space is currently area covered in grass, but will covered in pavers. The pavers are similar to the pavers inside of the stadium providing continuity of design. The proposed design includes pavers, brick pillars, a wood wall panel, and a pergola. The included drawings, diagrams, and spec sheets provide a deeper understanding of the project. As you will see, the structure will stand alone except for an existing fence that surrounds the entire stadium. There are no plans to modify the existing fence. The pergola will stand approximately 13' above ground and no trees, shrubs or flowers will be removed. As with the pavers, the pergola and wood panel wall tie into the natural, yet modern theme already evident throughout the campus. In fact, we are proposing to add additional flowers and wild grass.

Following from our initial conversations with Village of Lincolnshire staff, we understand this request to fall under the minor amendment process and are providing materials which meet those requirements herewith. Please accept our thanks for considering this request and feel free to contact me with any questions or concerns at (847) 415-4117.

Sincerely,

Sean P. Carney
Assistant Superintendent for Business

Large scale aerial of Hall of Fame

Pergola will be installed near the Southwest Entrance to our Stadium.

Current view facing Southeast

Current View of Proposed Site (looking Northeast)

Existing Fence. (continue behind wood panel wall)

Planters will include a mixture of perennial flowers.

Center planter box will include a variety of 24, 1 gallon perennials.

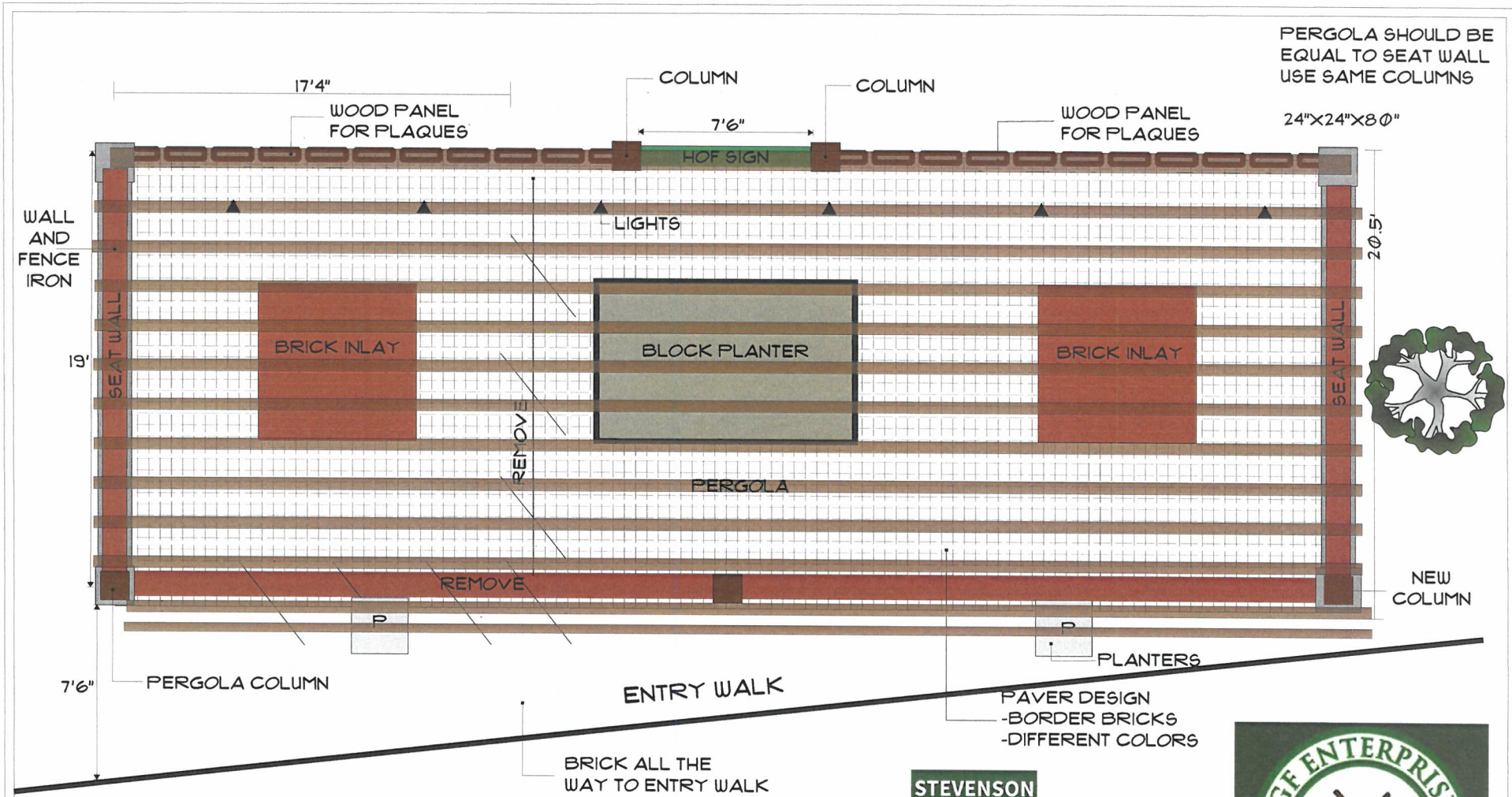

Top Down View
STEVENSON HIGH SCHOOL

STEVENSON HALL OF FAME

SCALE 1/4"=1'

TGF ENTERPRISES
LANDSCAPE • IRRIGATION • SNOW

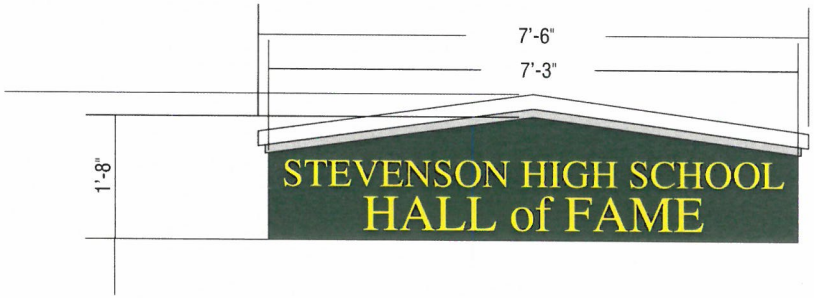

DOUBLE FACE ILLUMINATED DISPLAY
1/2" = 1'-0"

FABRICATED ALUMINUM CABINET / GREEN POLYURETHANE FINISH / ROUTED-OUT BACKED-UP YELLOW PLEXIGLAS COPY ALUMINUM ROOFTOP AND CAPS / WHITE FINISH

TGF ENTERPRISES • LANDSCAPE • IRRIGATION • SNOW

NORTH SHORE SIGN
1925 Industrial Drive Libertyville, Illinois 60048 847-816-7020
"Quality Signage Since 1930"

1930 2018 88 YEARS

Colors depicted on this drawing are printed simulations to assist in visualizing the design. They do not accurately reflect the actual colors specified.

This design is the exclusive property of North Shore Sign Company Inc., and is the result of the original and creative work of its employees. This drawing is submitted to the respective customer for the sole purpose of consideration of whether or not to purchase this design, or a sign manufactured to this design from North Shore Sign Co. **Distribution, use of, or exhibition of this drawing to anyone outside customers organization, in order to secure quotation, design work, or purchase of a sign either to this design or similar to this design, is expressly forbidden.** In the event that such distribution, use or exhibition occurs, **North Shore Sign is to be compensated $1500.00** for time, effort and creative service entailed in creating these plans, as well as any and all legal fees and expenses to enforce its rights.
Copyright 2016 North Shore Sign Company Inc.

STEVENSON HIGH SCHOOL
1 STEVENSON DR. LINCOLNSHIRE, IL.

SCALE NOTED		SALESPERSON DL
DATE 9/26/18		DRAWING # 11604
DRAW BY: AS		

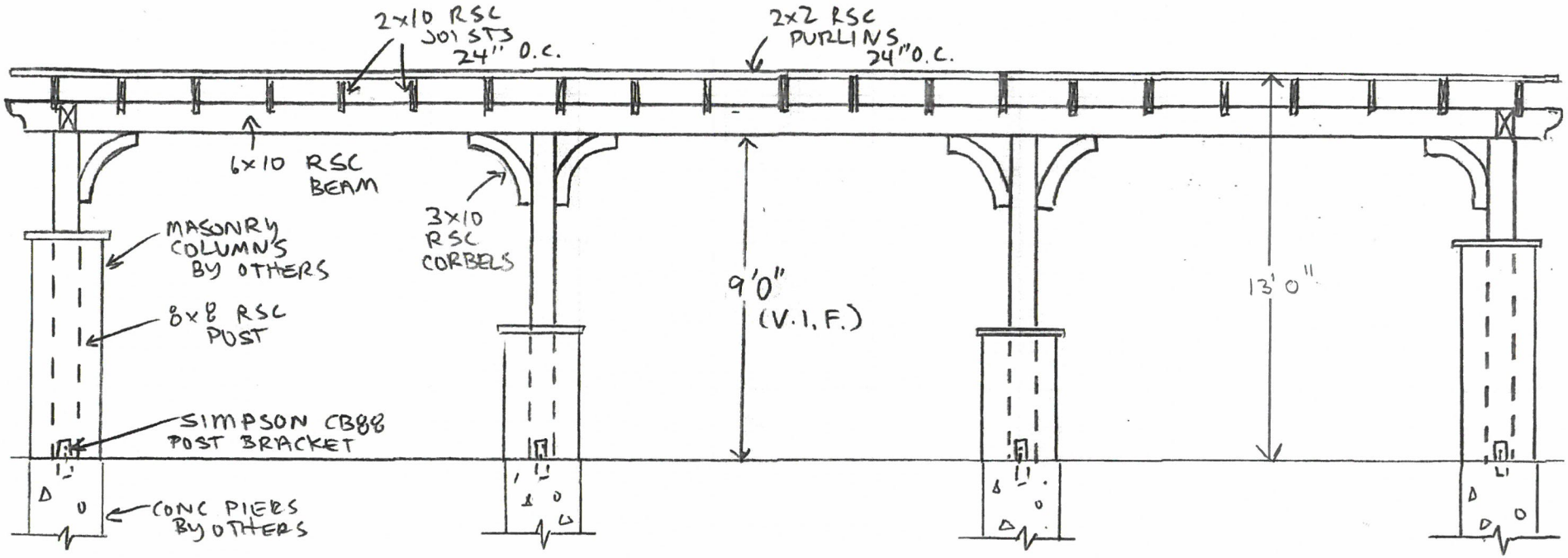

STEVENSON HIGH SCHOOL 1 STEVENSON DR, LINCOLNSHIRE IL		
DATE: 8/1/19	APPROVED BY:	DRAWN BY: EH
REVISED:		SCALE: 1/4=1'
CRAIGER CUSTOM DESIGN 2510 Route 176, Unit D, Crystal Lake IL 60014 815-479-9660		DRAWING #: 2 of 2

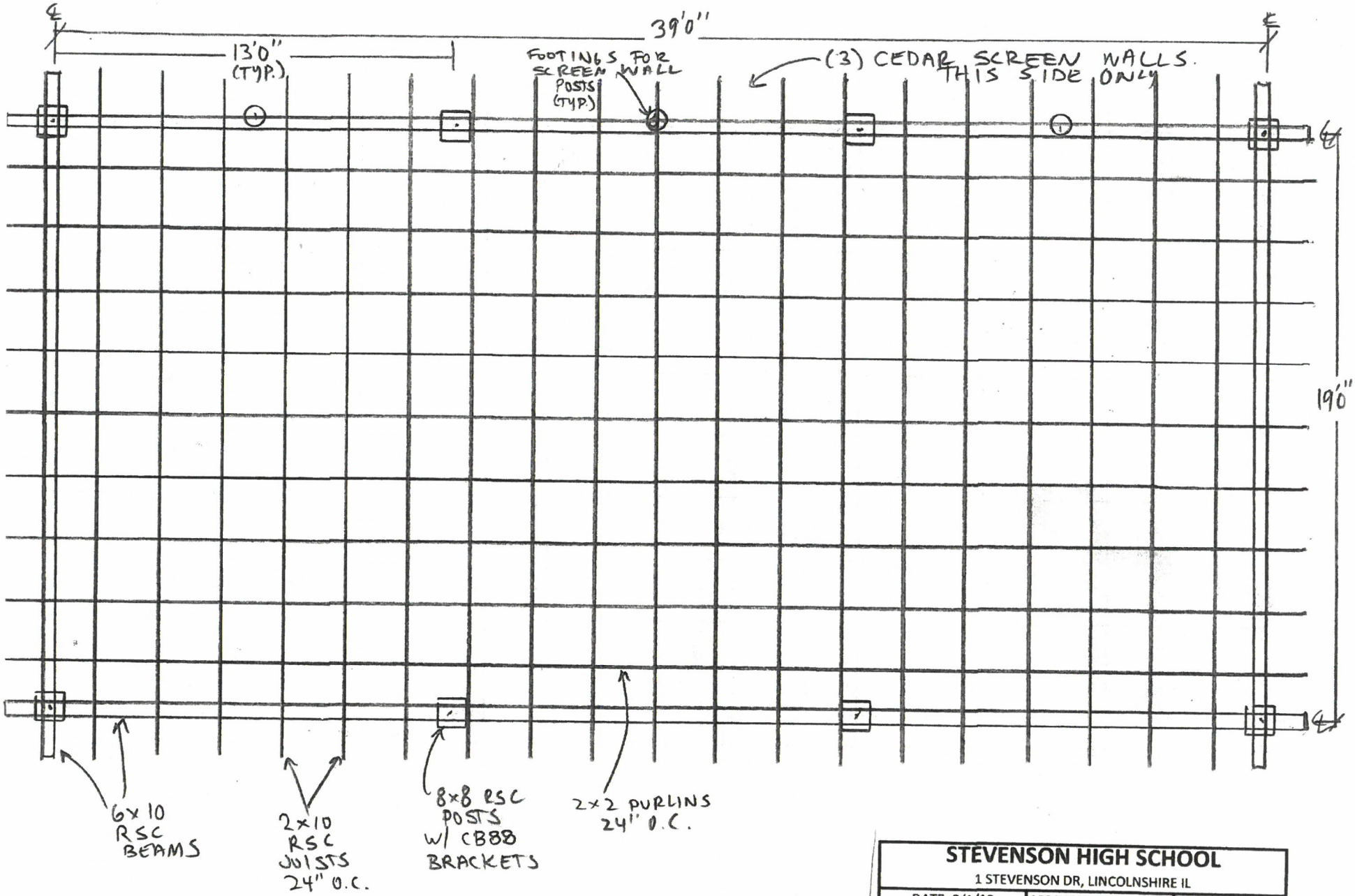

Top Down View
Fence runs along back of Wood Panel Wall (top of page)

STEVENSON HIGH SCHOOL 1 STEVENSON DR, LINCOLNSHIRE IL		
DATE: 8/1/19	APPROVED BY:	DRAWN BY: EH
REVISED:		SCALE: 1/4"=1'
CRAIGER CUSTOM DESIGN 2510 Route 176, Unit D, Crystal Lake IL 60014 815-479-9660		DRAWING #: 1 of 2

STEVENSON HIGH SCHOOL DISTRICT 125

Transition House Landscaping

August 20, 2019

Cherise Kennerley and Members of the Architectural Review Board
Village of Lincolnshire
One Olde Half Day Road
Lincolnshire, IL 60069

RE: Transition House Proposal

Dear Chairman Cherise Kennerley and Members of the Architectural Review Board,

Adlai E. Stevenson High School – District 125 is an established and respected institution in the Village of Lincolnshire and has served the community as one of the most highly recognized secondary education organizations in the nation. Under current zoning ordinances, Stevenson High School is zoned under a special use permit within an R1 residential district. Per Village Code, we are requesting a minor amendment approval from the Village of Lincolnshire for the erection of a pergola and additional landscaping.

As you might recall, the District recently renovated a District Building to create a day Transition House for students. This Summer, the District completed a landscaping project at the house to enhance the educational experience. Unfortunately, I was unaware of the village code regarding raised gardens and pergola projects prior to approval. On behalf of the District, I apologize. Included in this packet is an application, plans, and pictures seeking formal approval. For your reference, the pergola stands at 10'3" and the raised flower beds are 24" tall. Again, I apologize for the misstep and hope the Village understands my error was unintentional and accepts our modifications.

Following from our initial conversations with Village of Lincolnshire staff, we understand this request to fall under the minor amendment process and are providing materials which meet those requirements herewith.

Please accept our thanks for considering this request and feel free to contact me with any questions or concerns at (847) 415-4117.

Sincerely,

Sean P. Carney
Assistant Superintendent for Business

Large Aerial View of Pergola and raised beds

Close up of Pergola and raised beds

Pergola facing Southeast from driveway

Pergola facing Northwest from sidewalk

Pergola facing Southeast from driveway

Raised Planter Beds facing Southwest from driveway

Raised Planter Beds facing Northeast from back lot line

Raised Planter Beds facing Southwest from driveway